Compact optical | Sendix F3658 / F3678 (shaft / hollow shaft) | CANopen

The Sendix F36 singleturn with the patented Intelligent Scan Technology™ and CANopen interface boasts exceptional ruggedness and compact dimensions.

With a size of just 36 x 42 mm it offers a shaft or a blind hollow shaft of up to 10 mm. Its high-precision optical sensor technology can achieve a resolution of up to 16 bits.

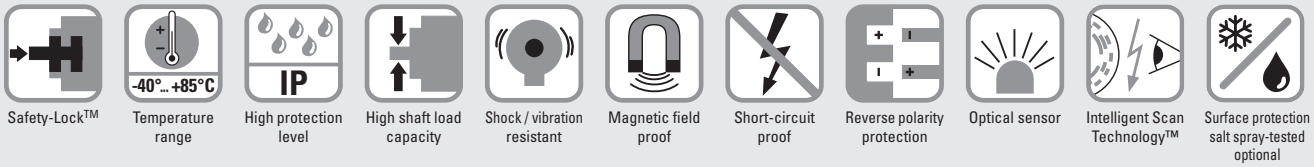

Reliable and magnetically insensitive

- Sturdy bearing construction in Safety-Lock™ design for resistance against vibration and installation errors.
- Ideal for use outdoors thanks to IP67 protection and wide temperature range from -40°C up to +85°C.
- Patented Intelligent Scan Technology™ with all singleturn and multiturn functions on one single OptoASIC - offering highest reliability, a high resolution up to 16 bits and 100 % magnetic field insensitiveness.

Up-to-the-minute fieldbus performance

- CANopen with current encoder profile.
- LSS services for configuration of the node address and baud rate.
- Variable PDO mapping in the memory.

Order code Shaft version

8.F3658	.	X	X	2	X	.	21	1	2
Type		a	b	c	d		e		

If for each parameter of an encoder the **underlined preferred option** is selected, then the delivery time will be 10 working days for a maximum of 10 pieces. Qts. up to 50 pcs. of these types generally have a delivery time of 15 working days.

10 by 10

a *Flange*
1 = clamping flange, IP67, ø 36 mm [1.42“]
3 = clamping flange, IP65, ø 36 mm [1.42“]
2 = synchro flange, IP67, ø 36 mm [1.42“]
4 = synchro flange, IP65, ø 36 mm [1.42“]

b *Shaft (ø x L), with flat*
1 = ø 6 x 12.5 mm [0.24 x 0.49“]
3 = ø 8 x 15 mm [0.32 x 0.49“]
5 = ø 10 x 20 mm [0.39 x 0.79“]
2 = ø 1/4“ x 12.5 mm [0.49“]
4 = ø 3/8“ x 5/8“

c *Interface / power supply*
2 = CANopen DS301 V4.02 / 10 ... 30 V DC

d *Type of connection*
1 = tangential cable, 1 m [3.28‘] PUR
3 = tangential cable, 5 m [16.40‘] PUR
F = tangential cable, special length PUR *)

*) Available special lengths (connection type F):
2, 3, 8, 10, 15 m [6.56, 9.84, 26.25, 32.80, 49.21‘]
order code expansion .XXXX = length in dm
ex.: 8.F3658.432F.2112.0030 (for cable length 3 m)

e *Fieldbus profile*
21 = CANopen encoder profile DS406 V3.2

Optional on request
- surface protection salt spray tested

Order code Hollow shaft

8.F3678	.	X	X	2	X	.	21	1	2
Type		a	b	c	d		e		

If for each parameter of an encoder the **underlined preferred option** is selected, then the delivery time will be 10 working days for a maximum of 10 pieces. Qts. up to 50 pcs. of these types generally have a delivery time of 15 working days.

10 by 10

a *Flange*
1 = with spring element, short, IP65
3 = with spring element, long, IP65
2 = with stator coupling, IP65, ø 46 mm [1.81“]

b *Blind hollow shaft*
5 = ø 6 mm [0.24“]
7 = ø 8 mm [0.32“]
4 = ø 10 mm [0.39“]
6 = ø 1/4“

c *Interface / power supply*
2 = CANopen DS301 V4.02 / 10 ... 30 V DC

d *Type of connection*
1 = tangential cable, 1 m [3.28‘] PUR
3 = tangential cable, 5 m [16.40‘] PUR
F = tangential cable, special length PUR *)

*) Available special lengths (connection type F):
2, 3, 8, 10, 15 m [6.56, 9.84, 26.25, 32.80, 49.21‘]
order code expansion .XXXX = length in dm
ex.: 8.F3658.432F.2112.0030 (for cable length 3 m)

e *Fieldbus profile*
21 = CANopen encoder profile DS406 V3.2

Optional on request
- surface protection salt spray tested

Industrial automation
Elincom Group
European Union: www.elinco.eu
Russia: www.elinc.ru

Compact optical	Sendix F3658 / F3678 (shaft / hollow shaft)	CANopen

Mounting accessory for shaft encoders		Order no.
Coupling	bellows coupling ø 19 mm [0.75“] for shaft 6 mm [0.24“]	**8.0000.1102.0808**

Mounting accessory for hollow shaft encoders		Order no.
Cylindrical pin, long for torque stops	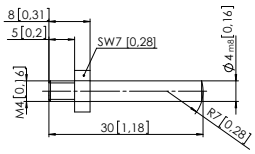	with fixing thread	**8.0010.4700.0000**

Further accessories can be found in the accessories section or in the accessories area of our website at: www.kuebler.com/accessories.
Additional connectors can be found in the connection technology section or in the connection technology area of our website at: www.kuebler.com/connection_technology.

Technical data

Mechanical characteristics

Maximum speed shaft version without shaft seal (IP65) or blind hollow shaft version		12000 min^{-1} 10000 min^{-1} (continuous)
shaft version with shaft seal (IP67)		10000 min^{-1} 8000 min^{-1} (continuous)
Starting torque at 20°C [68°F]		
	without shaft seal	< 0.007 Nm
	with shaft seal (IP67)	< 0.01 Nm
Shaft load capacity	radial	40 N
	axial	20 N
Weight		approx. 0.2 kg [7.06 oz]
Protection acc. to EN 60529	housing side shaft side	IP67 IP65 (solid shaft version opt. IP67)
Working temperature range		-40°C ... +85°C [-40°F ... +185°F]
Materials	shaft / hollow shaft	stainless steel
	flange	aluminium
	housing	zinc die-cast
	cable	PUR
Shock resistance acc. to EN 60068-2-27		2500 m/s^2, 6 ms
Vibration resistance acc. to EN 60068-2-6		100 m/s^2, 55 ... 2000 Hz

Electrical characteristics

Power supply	10 ... 30 V DC
Current consumption (no load)	max. 80 mA
Reverse polarity protection of the power supply	ja
UL approval	file 224618
CE compliant acc. to	EMC guideline 2014/30/EU RoHS guideline 2011/65/EU

Interface characteristics CANopen

Resolution	1 ... 65536 (16 bit), scalable default: 8192 (13 bit)
Code	binary
Interface	CAN high-speed acc. to ISO 11898, Basic- and Full-CAN, CAN specification 2.0 B
Protocol	CANopen profile DS406 V3.2 with manufacturer-specific add-ons, LSS-Service DS305 V2.0
Baud rate	10 ... 1000 kbit/s software configurable
Node address	1 ... 127 software configurable
Termination	software configurable
LSS protocol	CIA LSS protocol DS305, global command support for node address and baud rate, selective commands via attributes of the identity object

Diagnostic LED (two-colour, red/green)

LED ON or blinking	red	error display
	green	status display

© Fritz Kübler GmbH, subject to errors and changes. 04/2016

Compact optical | **Sendix F3658 / F3678 (shaft / hollow shaft)** | **CANopen**

General information about CANopen

The CANopen encoders support the latest CANopen communication profile according to DS301 V4.02. In addition, device-specific profiles like the encoder profile DS406 V3.2 and DS305 (LSS) are available.

The following operating modes may be selected: Polled Mode, Cyclic Mode, Sync Mode. Moreover, scale factors, preset values, limit switch values and many other additional parameters can be programmed via the CANbus. When switching the device on, all parameters, which have been saved on a flash memory to protect them against power failure, are loaded again.

The following output values may be combined in a freely variable way as PDO (PDO mapping): **position**, **speed** as well as the **status of the working area**.

The encoders are available with a connector or a cable connection.

The device address and baud rate can be set/modified by means of the software.

The two-colour LED located on the back indicates the operating or fault status of the CAN bus, as well as the status of the internal diagnostics.

CANopen communication profile DS301 V4.02

Among others, the following functionality is integrated. Class C2 functionality:

- NMT slave.
- Heartbeat protocol.
- Identity object.
- Error behaviour object.
- Variable PDO mapping self-start programmable (Power on to operational), 3 sending PDO's.
- Node address, baud rate and CANbus / Programmable termination.

CANopen encoder profile DS406 V3.2

The following parameters can be programmed:

- Event mode.
- 1 work area with upper and lower limit and the corresponding output states.
- Variable PDO mapping for position, speed, work area status.
- Extended failure management for position sensing.
- User interface with visual display of bus and failure status – 1 LED two colours.
- Customer-specific memory 16 Bytes.
- Customer-specific protocol.
- "Watchdog controlled" device.

LSS layer setting services DS305 V2.0

- Global command support for node ID and baud rate configuration.
- Selective protocol via identity object (1018h).

CANbus connection

The CANopen encoders are equipped with a Bus trunk line in various lengths and can be terminated in the device. The devices do not have an integrated T-coupler nor they are looped internally and must therefore only be used as end devices.

If possible, drop lines should be avoided, as in principle they lead to signal reflections. As a rule the reflections caused by the drop lines are not critical, if they have completely decayed before the point in time when the scanning occurs.

The sum of all the drop lines should not, for a particular baud rate, exceed the maximum length Lu.

Lu < 5 m [16.40'] cable length for 125 Kbit
Lu < 2 m [6.56'] cable length for 250 Kbit
Lu < 1 m [3.28'] cable length for 1 Mbit

When used as a drop line, the termination resistor should not be activated.

For a network with 3 encoders and 250 Kbit the maximum length of the drop line/ encoder must not exceed 70 cm.

Terminal assignment

Interface	Type of connection	Cable (isolate unused wires individually before initial start-up)					
2	1, 3, F	Signal:	+V	0 V	CAN_GND	CAN_H	CAN_L
		Cable colour:	BN	WH	GY	GN	YE

Compact optical	Sendix F3658 / F3678 (shaft / hollow shaft)	CANopen

Dimensions shaft version

Dimensions in mm [inch]

Clamping flange, ø 36 [1.42]
Flange type 1 and 3

1 M3, 6 [0.24] deep

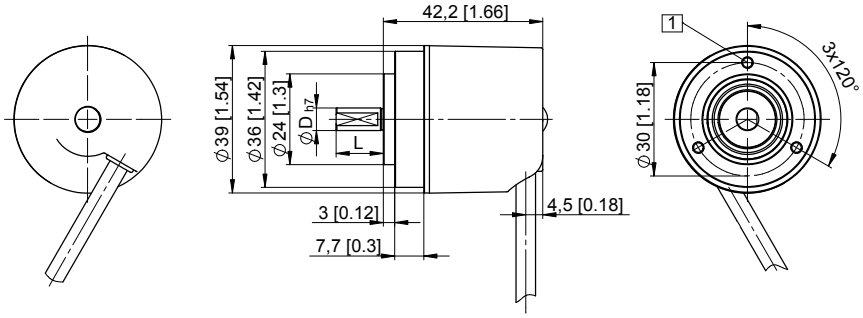

Synchro flange, ø 36 [1.42]
Flange type 2 and 4

1 M3, 6 [0.24] deep

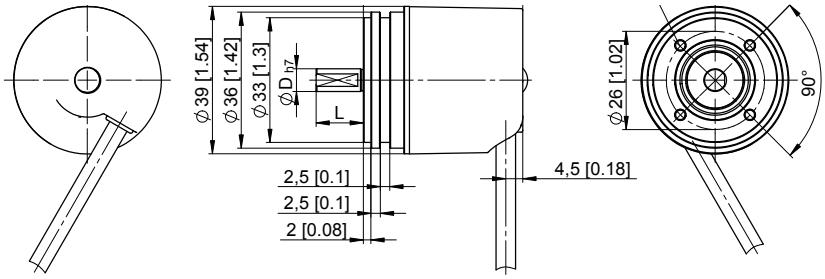

D	L	Fit
6 [0.24]	12.5 [0.49]	h7
8 [0.32]	15 [0.59]	h7
10 [0.39]	20 [0.79]	h7
1/4"	12.5 [0.49]	h7
3/8"	5/8"	h7

Dimensions hollow shaft version

Dimensions in mm [inch]

Flange with spring element
Flange type 1 and 3
(drawing with spring element short, spring element long is shown dashed)

1 M2.5, 5 [0.2] deep
2 Spring element, short recommendation: cylindrical pin DIN 7, ø 4 [0.16]
3 Spring element, long recommendation: cylindrical pin DIN 7, ø 4 [0.16]
4 Insertion depth for blind hollow shaft
5 Recommended torque for the clamping ring 0.7 Nm

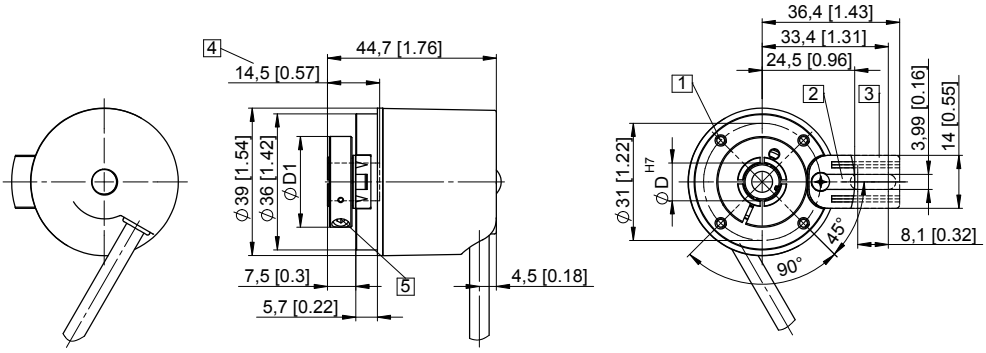

Flange with stator coupling, ø 46 [1.81"]
Flange type 2

1 Insertion depth for blind hollow shaft
2 Recommended torque for the clamping ring 0.7 Nm

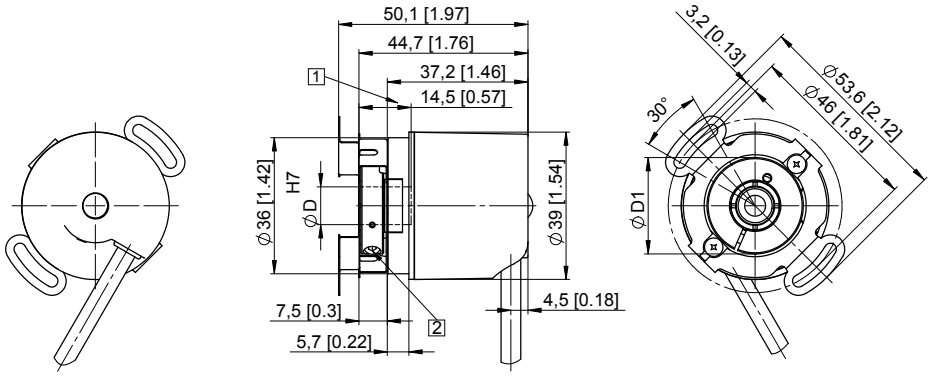

D	D1
6 [0.24]	24 [0.94]
8 [0.32]	25.5 [1.00]
10 [0.39]	25.5 [1.00]
1/4"	24 [0.94]

© Fritz Kübler GmbH, subject to errors and changes. 04/2016