Standard
ATEX/IECEx – zone 1/21, optical | **Sendix 7058 / 7078 (shaft / hollow shaft)** | **PROFIBUS DP**

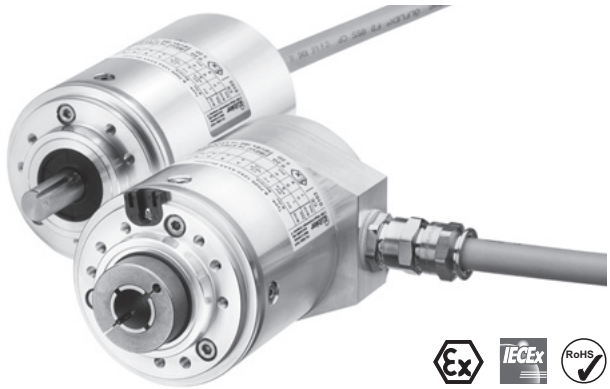

The Sendix 7058 / 7078 absolute singleturn encoders offer Ex protection in a compact 70 mm seawater durable aluminium housing, with a Profibus interface and optical sensor technology.

These shock and vibration-resistant encoders operate flexibly with a resolution of up to 16 bits; they are also available with axial and radial cable outlets.

Ex approval | Safety-Lock™ | High rotational speed | High protection level | High shaft load capacity | Shock / vibration resistant | Magnetic field proof | Short-circuit proof | Reverse polarity protection | Optical sensor | Seawater durable

Compact and safe

- Can be used even when space is tight.
- Minimal installation depth, diameter 70 mm.
- Compact cable outlet axial or radial.
- Can be operated in marine environments – housing and flange manufactured from seawater durable aluminium.
- Remains sealed even in harsh everyday use and ensures highest safety against field breakdowns (IP67 protection).

Explosion protection

- "Flameproof-enclosure" version.
- ATEX with EC type examination certificate.
- IECEx with certificate of conformity (CoC).

Order code Shaft version

8.7058	.	1	X	3	X	.	31	11	.	XXXX
Type		a	b	c	d		e			f 1)

a *Flange*
1 = clamping / synchronous flange, IP67, ø 70 mm [2.76"]

b *Shaft (ø x L)*
2 = 10 x 20 mm [0.39 x 0.79"], with flat
1 = 12 x 25 mm [0.47 x 0.98"], with keyway for 4 x 4 mm [0.16 x 0.16"] key

c *Interface / Power supply*
3 = PROFIBUS DP V0 / 10 ... 30 V DC

d *Type of connection*
1 = axial cable, 2 m [6.56'] PUR
2 = radial cable, 2 m [6.56'] PUR
A = axial cable, length > 2 m [6.56']
B = radial cable, length > 2 m [6.56']

e *Fieldbus profile*
31 = PROFIBUS DP V0 encoder profile class 2

f *Cable length in dm* 1)
0050 = 5 m [16.40']
0100 = 10 m [32.81']
0150 = 15 m [49.21']

Optional on request
- special cable length
- stainless steel version
- IP65 version for T6

Order code Hollow shaft

8.7078	.	X	X	3	X	.	31	11	.	XXXX
Type		a	b	c	d		e			f 1)

a *Flange*
1 = with spring element, short
5 = with stator coupling, IP67, ø 65 mm [2.56"]

b *Blind hollow shaft*
1 = ø 12 mm [0.47"]
2 = ø 14 mm [0.55"]

c *Interface / Power supply*
3 = PROFIBUS DP V0 / 10 ... 30 V DC

d *Type of connection*
1 = axial cable, 2 m [6.56'] PUR
2 = radial cable, 2 m [6.56'] PUR
A = axial cable, length > 2 m [6.56']
B = radial cable, length > 2 m [6.56']

e *Fieldbus profile*
31 = PROFIBUS DP V0 encoder profile class 2

f *Cable length in dm* 1)
0050 = 5 m [16.40']
0100 = 10 m [32.81']
0150 = 15 m [49.21']

Optional on request
- special cable length
- stainless steel version
- IP65 version for T6

1) Not applicable with connection types 1 and 2.

Industrial automation
Elincom Group
European Union: www.elinco.eu
Russia: www.elinc.ru

© Fritz Kübler GmbH, subject to errors and changes. 04/2016

Absolute encoders - singleturn

Standard ATEX/IECEx – zone 1/21, optical	Sendix 7058 / 7078 (shaft / hollow shaft)	PROFIBUS DP

Mounting accessory for shaft encoders		Order no.
Coupling	bellows coupling ø 19 mm [0.75“] for shaft 10 mm [0.39“]	**8.0000.1102.1010**

Further accessories can be found in the accessories section or in the accessories area of our website at: www.kuebler.com/accessories.
Additional connectors can be found in the connection technology section or in the connection technology area of our website at: www.kuebler.com/connection_technology.

Technical data

Explosion protection Sendix 7058

ATEX	
EC type-examination certificate	PTB09 ATEX 1106 X
Category (gas)	Ex II 2 G Ex d IIC T4 - T6 Gb
Category (dust)	Ex II 2D Ex tb IIIC T135°C - T85°C Db IP6x
Relevant standards	EN 60079-0:2009; EN 60079-1:2007; EN 60079-31:2009
IECEx	
Certificate of Conformity (CoC)	IECEx PTB 13.0026 X
Category (gas)	Ex d IIC T4 - T6 Gb
Category (dust)	Ex tb IIIC T135°C - T85°C Db IP6x
Relevant standards	IEC 60079-0:2007; IEC 60079-1:2007; IEC 60079-31:2008

Explosion protection Sendix 7078

ATEX	
EC type-examination certificate	IBExU 15 ATEX 1091 X
Category (gas)	Ex II 2 G Ex d IIC T4 - T6 Gb
Category (dust)	Ex II 2D Ex tb IIIC T135°C - T85°C Db
Relevant standards	EN 60079-0:2012; EN 60079-1:2014; EN 60079-31:2014
IECEx	
Certificate of Conformity (CoC)	IECEx IBE 15.0020 X
Category (gas)	Ex d IIC T4 - T6 Gb
Category (dust)	Ex tb IIIC T135°C - T85°C Db
Relevant standards	IEC 60079-0:2011; IEC 60079-1:2014; IEC 60079-31:2013

Mechanical characteristics

Maximum speed		6000 min^{-1} (continuous)
Starting torque – at 20°C [68°F]		< 0.05 Nm
Mass moment of inertia		4.0 x 10^{-6} kgm^2
Load capacity of shaft	radial	80 N
	axial	40 N
Weight		approx. 1.5 kg [52.91 oz]
Protection acc. to EN 60529		IP67
Ambient temperature		-40°C ... +60°C [-40 ... +140°F] Please note the specifications for temperature class in EC type-examination certificate!
Material	shaft	stainless steel
	flange / housing	seawater durable Al, type AlSiMgMn (EN AW-6082)
	cable	PUR
Shock resistance acc. to. EN 60068-2-27		2500 m/s^2, 6 ms
Vibration resistance acc. to EN 60068-2-6		100 m/s^2, 55 ... 2000 Hz

Electrical characteristics

Power supply	10 ... 30 V DC
Current consumption (no load)	max. 110 mA
Reverse polarity protection for power supply	yes
CE compliant acc. to	EMC guideline 2014/30/EU ATEX guideline 2014/34/EU RoHS guideline 2011/65/EU

EMC

Relevant standards	EN 55011 class B :2009 / A1:2010 EN 61000-6-2:2005 / AC:2005 EN 61000-6-3:2007 / A1:2011 EN 61326-1:2013

© Fritz Kübler GmbH, subject to errors and changes. 04/2016

Standard ATEX/IECEx – zone 1/21, optical	Sendix 7058 / 7078 (shaft / hollow shaft)	PROFIBUS DP

Interface characteristics PROFIBUS DP	
Resolution	1 ... 65536 (16 bit), scaleable default: 8192 (13 bit)
Code	binary
Interface	specification according to PROFIBUS DP 2.0 / standard (DIN 19245 part 3) / RS485 driver galvanically isolated
Protocol	Profibus encoder profile V1.1 class 1 and class 2 with manufacturer-specific add-ons
Baud rate	maximum 12 Mbit/s
Device address	software controlled setting of the device address via the SSA service with a class 2 master; default address: 125
Termination	active termination can only be switched on externally

Profibus encoder profile V1.1

The PROFIBUS DP device profile describes the functionality of the communication and the manufacturer-specific component within the PROFIBUS fieldbus system. The encoder profile applies to encoders and defines the individual objects independently of the manufacturer. In addition, the profile makes provision for additional extended functions specific to the manufacturer. The use of PROFIBUS compatible devices ensures that the systems of today are ready to meet the demands of the future.

The following parameters can be programmed

- Direction of rotation.
- Scaling – number of steps per revolution.
- Preset value.
- Diagnostics mode.

The following functionality is integrated

- Galvanic isolation of the bus stage with DC/DC converter.
- Line driver acc. to RS485 max. 12 MB.
- Full class 1 and class 2 functionality.
- Speed value.

Terminal assignment

Interface	Type of connection	Cable (isolate unused wires individually before initial start-up)								
3	1, 2, A, B	Signal:	0 V	+V	PB_A IN	PB_B IN	BUS_GND	BUS_ VDC	PB_A OUT	PB_B OUT
		Cable marking:	1	2	4	5	6	7	8	9

© Fritz Kübler GmbH, subject to errors and changes. 04/2016

Standard ATEX/IECEx – zone 1/21, optical	Sendix 7058 / 7078 (shaft / hollow shaft)	PROFIBUS DP

Dimensions shaft version

Dimensions in mm [inch]

Clamping / synchronous flange, ø 70 [2.76]
Shaft type 1 with axial cable outlet

1 9 x M4, 10 [0.39] deep

2 Keyway for DIN 6885-A-4x4x25 key

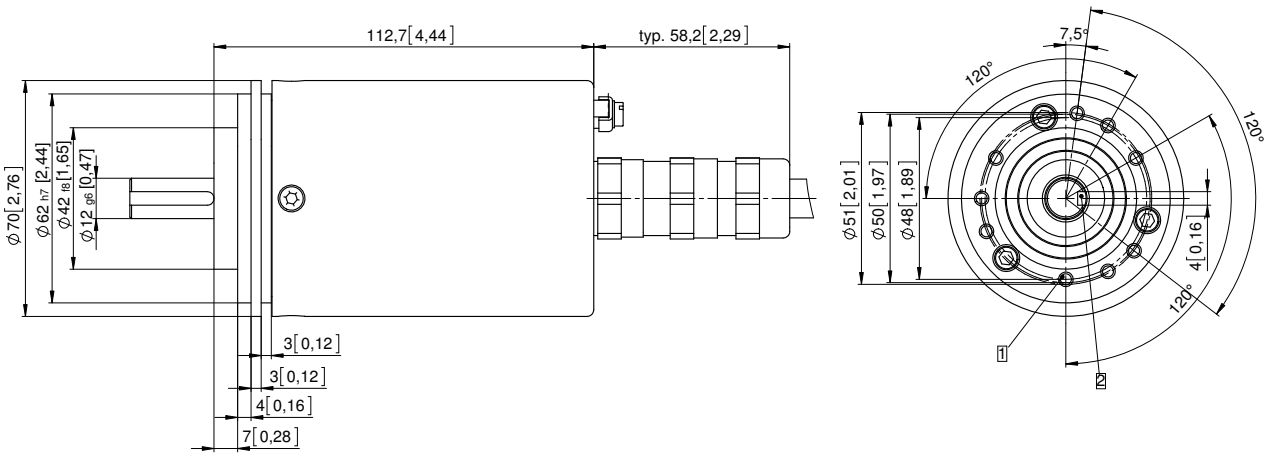

Clamping / synchronous flange, ø 70 [2.76]
Shaft type 2 with radial cable outlet

1 9 x M4, 10 [0.39] deep

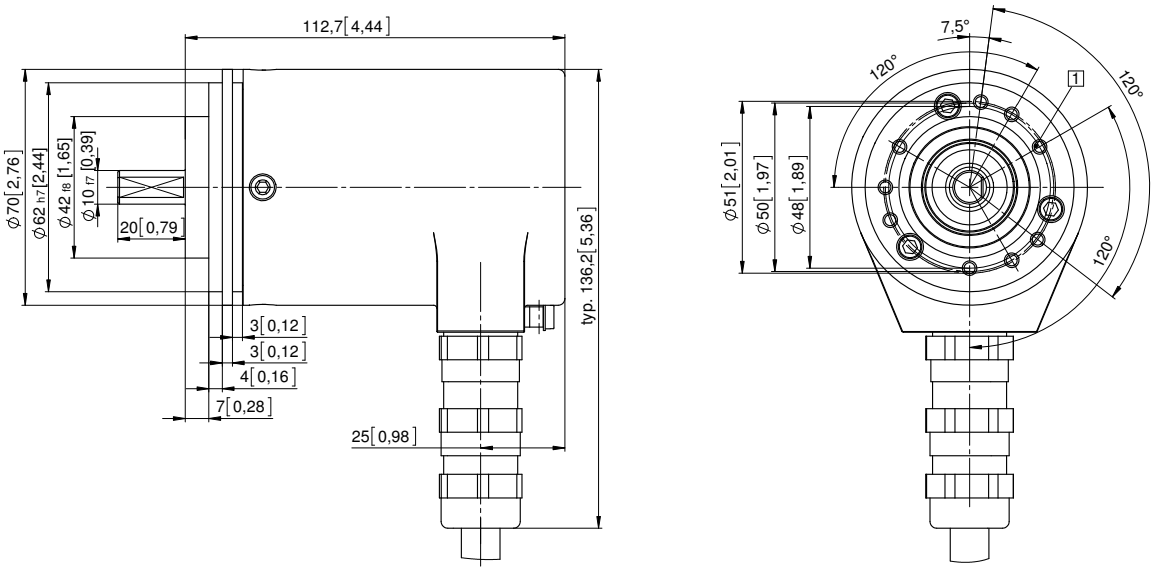

© Fritz Kübler GmbH, subject to errors and changes. 04/2016

Standard ATEX/IECEx – zone 1/21, optical	Sendix 7058 / 7078 (shaft / hollow shaft)	PROFIBUS DP

Dimensions hollow shaft version

Dimensions in mm [inch]

Flange with spring element, short
Flange type 1

1 9 x M4, 10 [0.39] deep
2 Torque stop slot, recommendation: cylindrical pin DIN7, 4 [0.16]
3 Recommended torque for the clamping ring 2,5 Nm

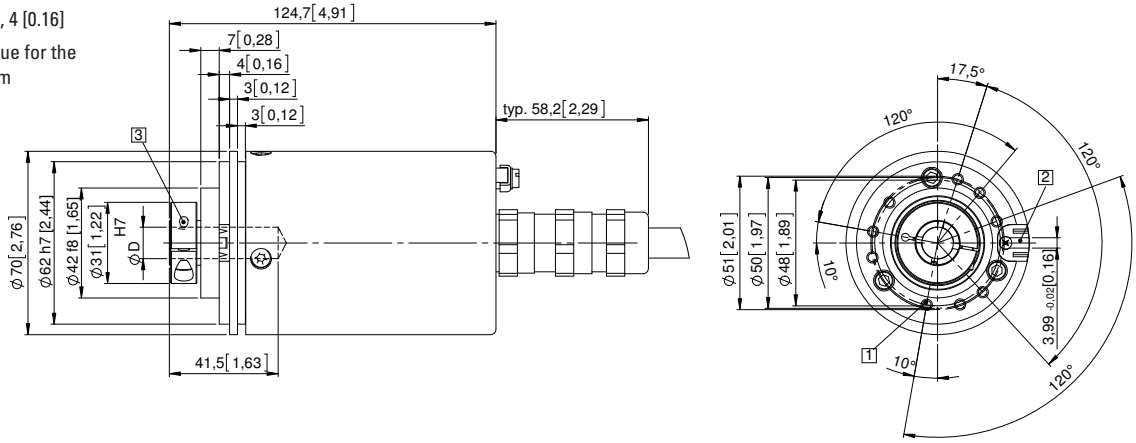

Flange with stator coupling, ø 65 [2.56]
Flange type 5
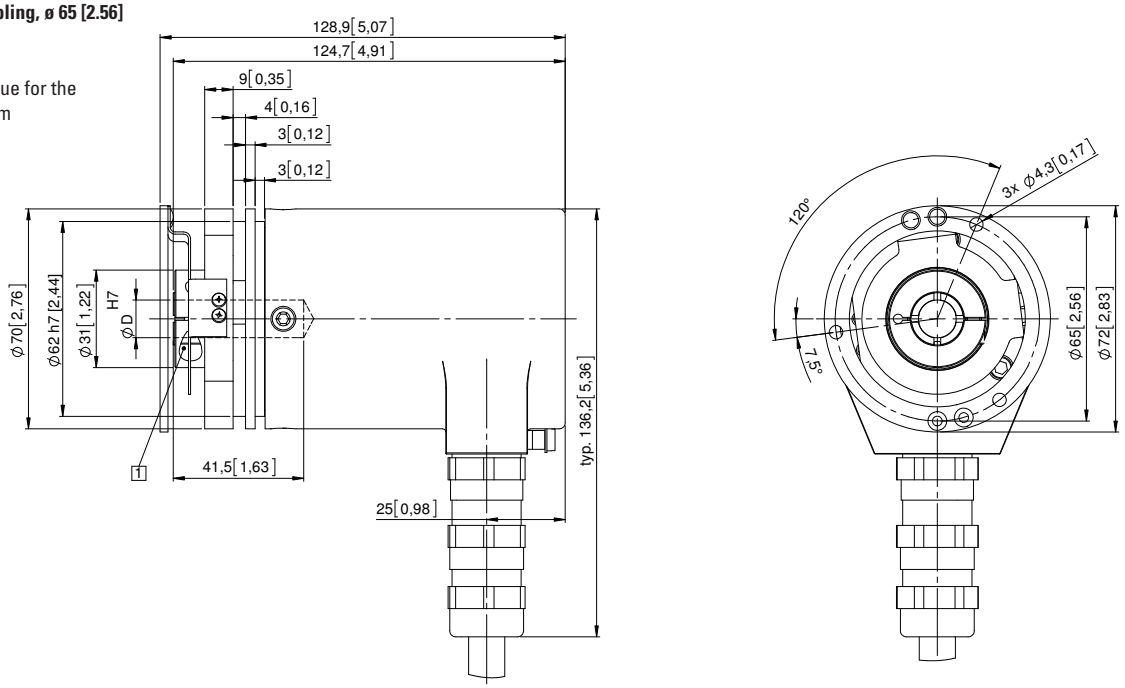
1 Recommended torque for the clamping ring 2,5 Nm