**Standard**
**ATEX / IECEx – zone 1 / 21, SIL2/PLd, optical** | **Sendix SIL 7053FS2 (shaft)** | **SSI / BiSS + SinCos**

**Ex protection and Functional Safety in one device.**

**The absolute singleturn encoders 7053FS2 of the Sendix SIL family are suited for use in safety-related applications up to SIL2 acc. to EN 61800-5-2 or PLd to EN ISO 13849-1.**

**In addition, these devices ensure Ex protection in a compact 70 mm housing out of seawater durable aluminium.**

Ex approval | Safety-Lock™ | High rotational speed | High protection level | High shaft load capacity | Shock / vibration resistant | Magnetic field proof | Short-circuit proof | Reverse polarity protection | Optical sensor | Seawater durable

## Functional Safety

- Encoder with individual certificate from IFA / TÜV.
- Suitable for applications up to SIL2 acc. to EN 61800-5-2.
- Suitable for applications up to PLd acc. to EN ISO 13849-1.
- SSI or BiSS interface with incremental SinCos tracks with 2048 ppr.
- Certified mechanical mounting + electronic.

## Explosion protection

- "Flameproof-enclosure" version.
- ATEX with EC type examination certificate.
- IECEx with certificate of conformity (CoC).

**Order code Shaft version**

| 8.7053FS2 | . | 1 | X | 4 | X | . | X | X | 2 | 1 | . | XXXX |
|---|---|---|---|---|---|---|---|---|---|---|---|---|
| Type | | a | b | c | d | | e | f | g | h | | i [1] |

**a** *Flange*
1 = clamping / synchronous flange, IP67, ø 70 mm [2.76"]

**b** *Shaft (ø x L)*
2 = 10 x 20 mm [0.39 x 0.79"], with flat
1 = 12 x 25 mm [0.47 x 0.98"], with keyway for 4 x 4 mm [0.16 x 0.16"] key

**c** *Interface / power supply*
4 = SSI, BiSS + 2048 ppr. SinCos / 10 ... 30 V DC

**d** *Type of connection*
1 = axial cable, 2 m [6.56'] PUR
2 = radial cable, 2 m [6.56'] PUR
A = axial cable, length > 2 m [6.56']
B = radial cable, length > 2 m [6.56']
preferred length see **i**, e. g.: 0100 = 10 m [32.81']

**e** *Code*
B = SSI, binary
C = BiSS, binary
G = SSI, gray

**f** *Resolution* [2]
A = 10 bit
1 = 11 bit
2 = 12 bit
3 = 13 bit
4 = 14 bit
7 = 17 bit

**g** *Inputs / outputs* [2]
2 = SET input

**h** *Options*
1 = no option

**i** *Cable length in dm* [1]
0050 = 5 m [16.40']
0100 = 10 m [32.81']
0150 = 15 m [49.21']

*Optional on request*
- special cable length
- stainless steel version
- other resolutions

1) Not applicable with connection types 1 and 2.
2) Resolution, preset value and counting direction factory-programmable.

Industrial automation
Elincom Group
European Union: www.elinco.eu
Russia: www.elinc.ru

© Fritz Kübler GmbH, subject to errors and changes. 04/2016

| Standard<br>ATEX/IECEx – zone 1/21, SIL2/PLd, optical | Sendix SIL 7053FS2 (shaft) | SSI/BiSS+SinCos |
|---|---|---|

| Accessories | | Order no. |
|---|---|---|
| **EMC shield terminal** | for top-hat rail mounting | **8.0000.4G06.0000** |
| **Screw retention** | Loctite 243, 5 ml | **8.0000.4G05.0000** |
| **Bellows coupling, safety-oriented** | You will find an overview of our couplings for Sendix SIL shaft encoders in the accessories section or under www.kuebler.com/accessories. | |
| **Safety modules Safety-M compact / modular** | You will find an overview of our systems and components for Functional Safety and the corresponding software in the safety technology section or under www.kuebler.com/safety. | |
| **LED SSI display 570 / 575** | Electronic position display up to 32 bit. You will find an overview in the accessories section or under www.kuebler.com/position_display. | |

Further accessories can be found in the accessories section or in the accessories area of our website at: www.kuebler.com/accessories.
Additional connectors can be found in the connection technology section or in the connection technology area of our website at: www.kuebler.com/connection_technology.

## Technical data

### Explosion protection

**ATEX**

| | |
|---|---|
| **EC type-examination certificate** | PTB09 ATEX 1106 X |
| **Category (gas)** | Ex II 2 G Ex d IIC T4 - T6 Gb |
| **Category (dust)** | Ex II 2D Ex tb IIIC T135°C - T85°C Db IP6x |
| **Relevant standards** | EN 60079-0:2009;<br>EN 60079-1:2007;<br>EN 60079-31:2009 |

**IECEx**

| | |
|---|---|
| **Certificate of Conformity (CoC)** | IECEx PTB 13.0026 X |
| **Category (gas)** | Ex d IIC T4 - T6 Gb |
| **Category (dust)** | Ex tb IIIC T135°C - T85°C Db IP6x |
| **Relevant standards** | IEC 60079-0:2007;<br>IEC 60079-1:2007;<br>IEC 60079-31:2008 |

### Notes regarding "Functional Safety"

These encoders are suitable for use in safety-related systems up to SIL2 acc. to EN 61800-5-2 and PLd to EN ISO 13849-1 in conjunction with controllers or evaluation units, which possess the necessary functionality.
Additional functions can be found in the operating manual.

### Safety characteristics

| | |
|---|---|
| **Classification** | PLd / SIL2 |
| **System structure** | 2 channel (Cat. 3 / HFT = 1) |
| **$PFH_d$ value** [1] | $2.16 \times 10^{-8}\ h^{-1}$ |
| **Mission time / Proof test interval** | 20 years |
| **Relevant standards** | EN ISO 13849-1:2008<br>EN ISO 13849-2:2013<br>EN 61800-5-2:2007 |

### Electrical characteristics

| | |
|---|---|
| **Power supply** | 10 ... 30 V DC |
| **Current consumption** (no load) | max. 45 mA |
| **Reverse polarity protection for power supply** | yes |
| **Short circuit proof outputs** | yes [2] |
| **CE compliant** acc. to | EMC guideline 2014/30/EU<br>ATEX guideline 2014/34/EU<br>Machinery directive 2006/42/EC<br>RoHS guideline 2011/65/EU |

### EMC

| | |
|---|---|
| **Relevant standards** | EN 55011 class B :2009 / A1:2010<br>EN 61000-6-2:2005 / AC:2005<br>EN 61000-6-3:2007 / A1:2011<br>EN 61326-1:2013 |

### Mechanical characteristics

| | | |
|---|---|---|
| **Maximum speed** | | 6000 $min^{-1}$ (continuous) |
| **Starting torque** – at 20°C [68°F] | | < 0.05 Nm |
| **Mass moment of inertia** | | $4.0 \times 10^{-6}\ kgm^2$ |
| **Load capacity of shaft** | radial<br>axial | 80 N<br>40 N |
| **Weight** | | approx. 1.3 kg [45.86 oz] |
| **Protection** acc. to EN 60529 | | IP67 |
| **Ambient temperature** | | -40°C ... +60°C [-40 ... +140°F]<br>Please note the specifications for temperature class in EC type-examination certificate! |
| **Material** | shaft<br>flange / housing<br>cable | stainless steel<br>seawater durable Al,<br>type AlSiMgMn (EN AW-6082)<br>PUR |
| **Shock resistance** acc. to. EN 60068-2-27 | | 500 $m/s^2$, 11 ms |
| **Vibration resistance** acc. to EN 60068-2-6 | | 200 $m/s^2$, 10 ... 150 Hz |

1) The specified value is based on a diagnostic coverage of 90 %, that must be achieved with an encoder evaluation unit.
The encoder evaluation unit must meet at least the requirements for SIL2.
2) Short circuit to 0 V or to output, one channel at a time, power supply correctly applied.


© Fritz Kübler GmbH, subject to errors and changes. 04/2016

| Standard<br>ATEX/IECEx – zone 1/21, SIL2/PLd, optical | Sendix SIL 7053FS2 (shaft) | SSI/BiSS + SinCos |
|---|---|---|

## SSI interface

| | | |
|---|---|---|
| **Output driver** | | RS485 transceiver type |
| **Permissible load / channel** | | max. +/- 20 mA |
| **Signal level** | HIGH | typ 3.8 V |
| | LOW at $I_{Load}$ = 20 mA | typ 1.3 V |
| **Resolution** | | 10 ... 14 bit and 17 bit |
| **Code** | | binary or gray |
| **SSI clock rate** | | 50 kHz ... 2 MHz |
| **Data refresh rate** | resolution ≤ 14 bit | ≤ 1 µs |
| | resolution ≥ 15 bit | 4 µs |
| **Monoflop time** | | ≤ 15 µs |

**Note**: if clock starts cycling within monoflop time a second data transfer starts with the same data. If clock starts cycling after monoflop time, the data transfer starts with updated values. The update rate depends on clock speed, data length and monoflop time.

## BiSS interface

| | |
|---|---|
| **Resolution** | 10 ... 14 bit and 17 bit |
| **Code** | binary |
| **Clock rate** | up to 10 MHz |
| **Max. update rate** | < 10 µs, depends on the clock rate and the data length |
| **Data refresh rate** | ≤ 1 µs |

**Note:**
- bidirectional, factory programmable parameters are: resolution, code, direction, alarms and warnings
- CRC data verification

## SinCos interface

| | |
|---|---|
| **Max. frequency -3dB** | 400 kHz |
| **Signal level** | 1 Vpp (±10 %) |
| **Short circuit proof** | yes [1] |
| **Pulse rate** | 2048 ppr |

## SET input

| | | |
|---|---|---|
| **Input** | | HIGH active |
| **Input type** | | comparator |
| **Signal level** | HIGH | min. 60 % of +V |
| (+V = Power supply) | | max. +V |
| | LOW | max. 25 % of +V |
| **Input current** | | < 0.5 mA |
| **Min. pulse duration (SET)** | | 10 ms |
| **Timeout after SET signal** | | 14 ms |

The encoder can be set to zero at any position by means of a HIGH signal on the SET input. Other preset values can be factory-programmed.
The SET input has a signal delay time of approximately 1 ms. Once the SET function has been triggered, the encoder requires an internal processing time of approximately 15 ms before the new position data can be read.

If this input is not used, it should be connected to 0 V (Encoder ground GND) in order to avoid interferences.

## Power-ON Time

After Power-ON the device requires a time of approx. 150 ms before valid data can be read.

Hot plugging of the encoder should be avoided.

### Terminal assignment

| Interface | Type of connection | Features | Cable (isolate unused wires individually before initial start-up) | | | | | | | | | | | | |
|---|---|---|---|---|---|---|---|---|---|---|---|---|---|---|---|
| 4 | 1, 2, A, B | SET | Signal: | 0 V | +V | C+ | C- | D+ | D- | SET | A | $\overline{A}$ | B | $\overline{B}$ | ⏚ |
| | | | Cable marking: | 6 | 1 | 2 | 3 | 4 | 5 | 11 | 7 | 8 | 9 | 10 | shield |

+V: Encoder power supply +V DC
0 V: Encoder power supply ground GND (0 V)
C+, C-: Clock signal
D+, D-: Data signal
SET: SET input
A, $\overline{A}$: Cosine signal
B, $\overline{B}$: Sine signal
⏚: Protective earth

1) Short circuit to 0 V or to output, one channel at a time, power supply correctly applied.



© Fritz Kübler GmbH, subject to errors and changes. 04/2016

| Standard<br>ATEX/IECEx – zone 1/21, SIL2/PLd, optical | Sendix SIL 7053FS2 (shaft) | SSI/BiSS + SinCos |
|---|---|---|

## Dimensions

Dimensions in mm [inch]

**Clamping / synchronous flange, ø 70 [2.76]**
**Shaft type 1 with axial cable outlet**

1 9 x M4, 10 [0.39] deep

2 Keyway for DIN 6885-A-4x4x25 key

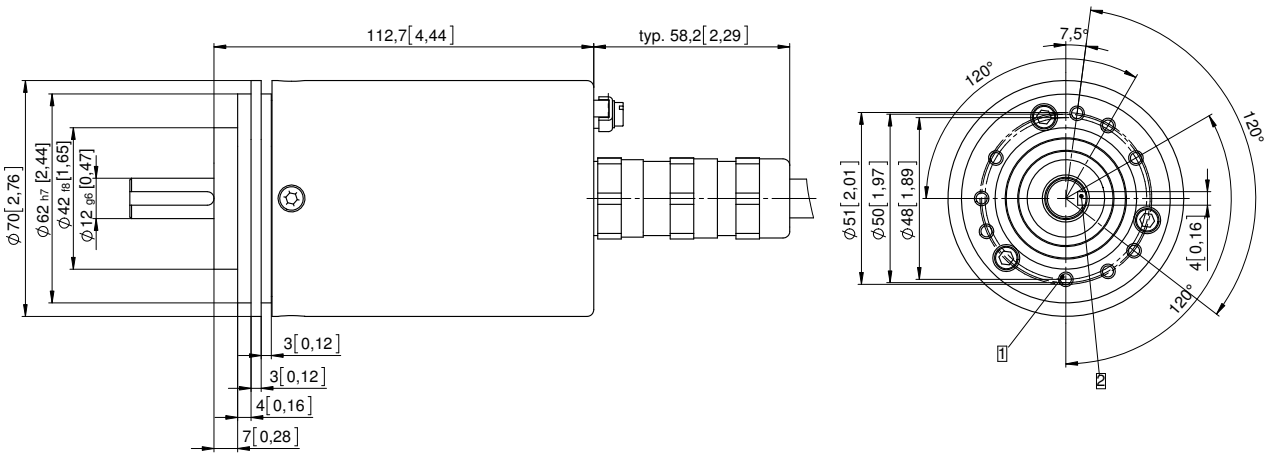


**Clamping / synchronous flange, ø 70 [2.76]**
**Shaft type 2 with radial cable outlet**

1 9 x M4, 10 [0.39] deep

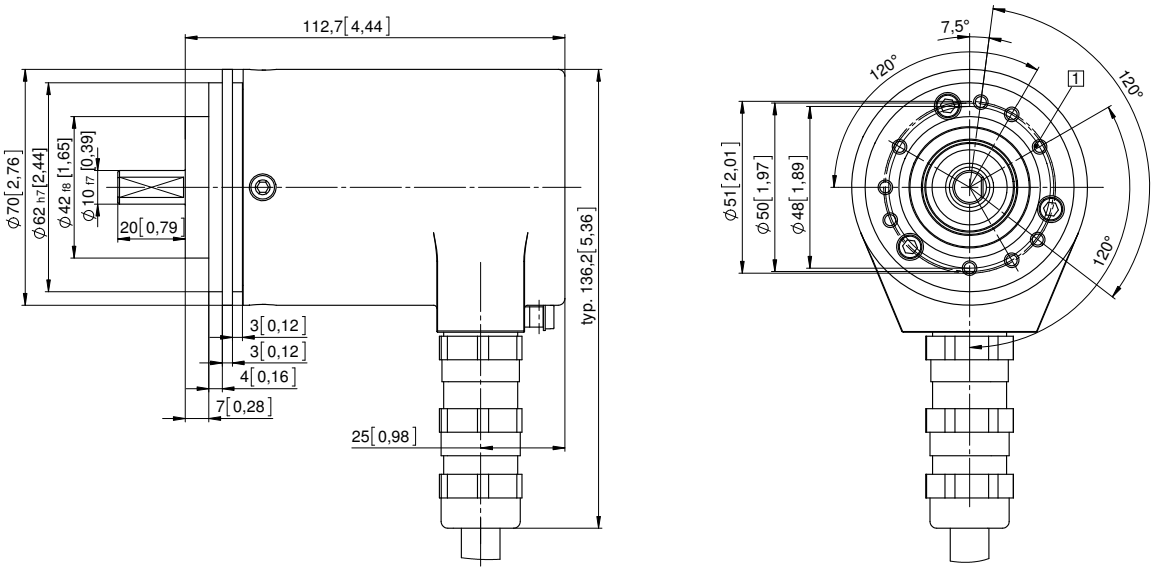



© Fritz Kübler GmbH, subject to errors and changes. 04/2016