Industrial automation
Elincom Group
European Union: www.elinco.eu
Russia: www.elinc.ru

Eltra® sensing technology

EH-EL 88 P

INCREMENTAL ENCODER
MOTOR SERIES

ISO 9001:2000

MAIN FEATURES

ø 88 mm through hollow shaft encoder designed for middle size asyncronous motors.

- Up to 30mm bore diameter
- Easy mounting
- Sturdy mechanic
- Resolution up to 2500 ppr with zero signal
- Several output electronics
- Power supply up to 28 V DC
- Max output frequency up to 105 KHz

ORDERING CODE

EH 88 P 1024 Z 5/28 P 30 S 3 PR . XXX

SERIES
incremental encoder series EH
incremental encoder series EL

SIZE
mm 88

TYPE
through hollow shaft with spring P

RESOLUTION
(EH series) max ppr 2500
(EL series) max ppr 2048
N.B.: see resolution table or please directly contact our offices for pulses availability

ZERO PULSE
without zero pulse S
with zero pulse Z

POWER SUPPLY
(available only with L electronic output) 5 V DC 5
(available only with L or PC electronic output) 8 ... 24 V DC 8/24
5 ... 28 V DC 5/28

ELECTRONIC INTERFACE
N NPN
C NPN open collector (*available on EL series only*)
P push-pull
PC protected push-pull (AEIC-7272)
L line driver

BORE DIAMETER
25 mm
30 mm
N.B.: please directly contact our offices for diameter availability

ENCLOSURE RATING
S IP 65

MAX ROTATION SPEED
3 3000 rpm

OUTPUT TYPE
PR cable output radial with cable gland (standard length 0.5 m)

VARIANT
XXX custom version

EH-EL 88 P

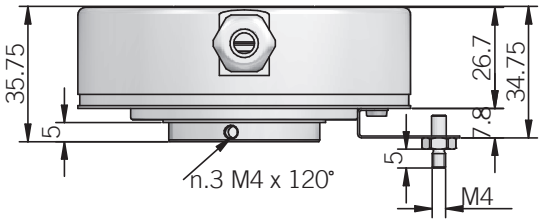

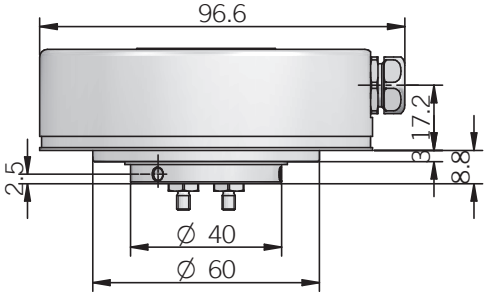

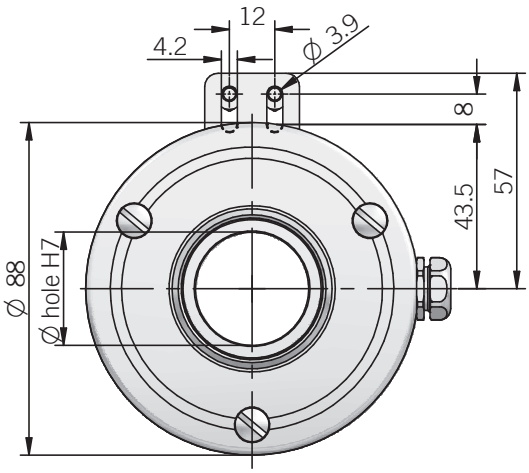

Electrical specifications

Resolution	from 250 to 2500 ppr (EH series) from 2 to 2048 ppr (EL series)
Power supply	5 = 4,5 ... 5,5 V DC 5/28 = 4,75 ... 29,5 V DC 8/24 =7,6 ... 25,2 V DC (reverse polarity protection)
Current consumption without load	100 mA max
Max load current	50 mA for channel 20 mA for channel (line driver)
Electronic interface for incremental signals	NPN / NPN open collector / push-pull / line driver
Counting direction	A leads B clockwise (shaft view)
Max output frequency	105 kHz
Electromagnetic compatibility	IEC 61000-6-2 IEC 61000-6-4

Mechanical specifications

Bore diameter	ø 25 / 30 mm
Enclosure rating	IP 65 (IEC 60529)
Shock	50 G, 11 ms (IEC 60068-2-27)
Vibration	20 G, 10÷2000 Hz (IEC 60068-2-6)
Max rotation speed	3000 rpm
Body material	EN-AW 2011 aluminum
Shaft material	1.4305 / AISI 303 stainless steel
Housing material	EN-AW 2011 aluminum
Bearings	2 ball bearings
Bearings life	10^9 revolutions
Operating temperature	-10° ... +70 °C (+14° ... +158°F)
Storage temperature	-25° ... +85 °C (-13° ... +185°F)
Weight	350 g

Connections and standard colours

Function	Push pull / Npn / Npn open collector	Line driver
+V DC	red	red
0 V	black	black
Ch. A	green	green
Ch. A-	/	brown
Ch. B	yellow	yellow
Ch. B-	/	orange
Ch. Z	blue	blue
Ch. Z-	/	white
⏚	shield	shield

Resolutions EH series

250 - 256 - 500 - 512 - 700 - 720 - 1000 - 1024 - 1440 - 2500

Resolutions EL series

2 - 5 - 90 - 100 - 200 - 360 - 400 - 600 - 900 - 2000 - 2048

www.eltra.it - eltra@eltra.it

© Copyright 2015 Eltra S.p.a. Unipersonale. All rights reserved. All informations in this catalog are subject to change without notice.
Eltra takes no responsibility for typographic errors. For the terms of sales please check the website www.eltra.it.