Санкт-Петербург, ул. Седова, д.53
info@elinc.ru +7 (812) 7-028-029
www.elinc.ru

Changes for the Better

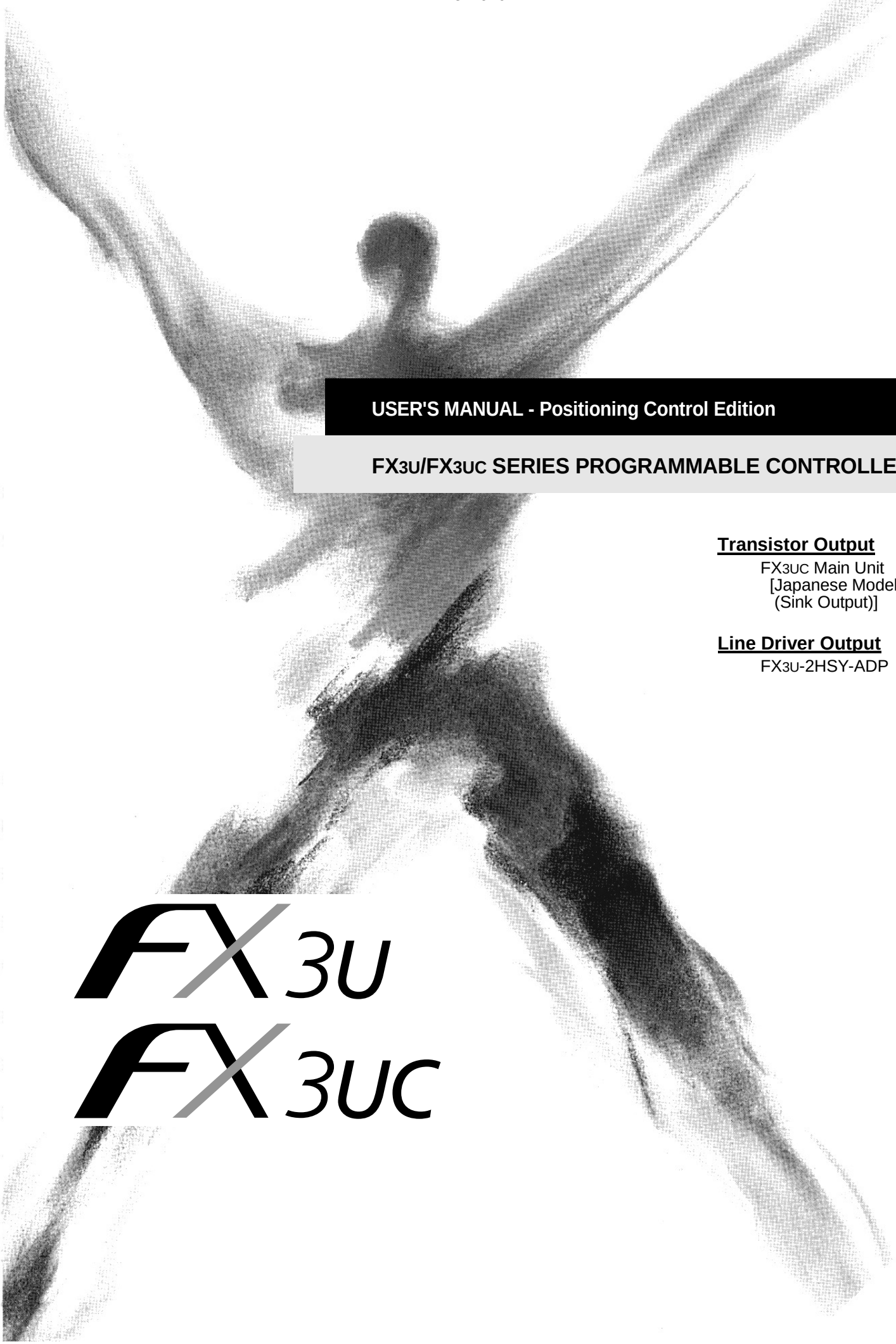

USER'S MANUAL - Positioning Control Edition

FX3U/FX3UC SERIES PROGRAMMABLE CONTROLLERS

Transistor Output

FX3UC Main Unit
[Japanese Model
(Sink Output)]

Line Driver Output

FX3U-2HSY-ADP

FX3U

FX3UC

Safety Precautions

(Read these precautions before using.)

Before installing, operating, maintenance or inspecting this product, thoroughly read and understand this manual and the associated manuals. Also pay careful attention to handle the module properly and safety.

This manual classifies the safety precautions into two categories: DANGER and CAUTION.

DANGER	Indicates that incorrect handling may cause hazardous conditions, resulting in death or severe injury.
CAUTION	Indicates that incorrect handling may cause hazardous conditions, resulting in medium or slight personal injury or physical damage.

Depending on circumstances, procedures indicated by CAUTION may also be linked to serious results.
In any case, it is important to follow the directions for usage.
Store this manual in a safe place so that you can take it out and read it whenever necessary. Always forward it to the end user.

1. DESIGN PRECAUTIONS

DANGER	Reference
• Provide a safety circuit on the outside of the PLC so that the whole system operates to ensure the safety even when external power supply trouble or PLC failure occurs. Otherwise, malfunctions or output failures may result in an accident. 1) An emergency stop circuit, a protection circuit, an interlock circuit for opposite movements, such as normal and reverse rotations, and an interlock circuit for preventing damage to the machine at the upper and lower positioning limits should be configured on the outside of the PLC. 2) When the PLC CPU detects an error, such as a watch dog timer error, during self-diagnosis, all outputs are turned off. When an error that cannot be detected by the PLC CPU occurs in an input/output control block, output control may be disabled. Design external circuits and mechanisms to ensure safe operations of the machine in such a case. 3) When some sort of error occurs in a relay, triac or transistor of the output unit, output may be kept on or off. For output signals that may lead to serious accidents, design external circuits and mechanisms to ensure safe operations of the machine in such cases.	B-4 B-14 B-67

CAUTION	Reference
• Do not bundle the control line together with the main circuit or power line. Do not lay the control line near them.As a rule, lay the control line at least 100mm(3.94") or more away from the main circuit or power line. Noise may cause malfunctions. • Install in a manner which prevents excessive force from being applied to the built-in connectors dedicated to programming, power connectors and I/O connectors. Failure to do so may result in wire breakage or failure of the PLC.	B-4 B-14 B-67

2. WIRING PRECAUTIONS

DANGER	Reference
• Cut off all phases of the power source externally before installation or wiring work in order to avoid electric shock or damage of product. • Make sure to attach the terminal cover offered as an accessory to the product before turning on the power or starting the operation after installation or wiring work. Failure to do so may cause electric shock.	B-4 B-22 B-67

CAUTION	Reference
• Connect the AC power supply wiring to the dedicated terminals described in this manual. If an AC power supply is connected to a DC input/output terminal or DC power supply terminal, the PLC will be burnt out. • Connect the DC power supply wiring to the dedicated terminals described in this manual. If an AC power supply is connected to a DC input/output terminal or DC power supply terminal, the PLC will be burnt out. • Do not wire vacant terminals externally. Doing so may damage the product. • Perform class D grounding (grounding resistance: 100Ω or less) to the grounding terminal in the FX3U Series main unit with a 2mm2 or thicker wire. Do not connect the grounding terminal at the same point as a heavy electrical system (refer to the manual of the PLC main unit). • Perform class D grounding (grounding resistance: 100Ω or less) to the grounding terminal in the FX3UC Series main unit with a wire as thick as possible. Do not connect the grounding terminal at the same point as a heavy electrical system (refer to the manual of the PLC main unit). • When drilling screw holes or wiring, cutting chips or wire chips should not enter ventilation slits. such an accident may cause fire, failures or malfunctions. • Use the product in such a status that excessive force is not applied on I/O connectors. Failure to do so may result in wire breakage or failure of the PLC. • Fit the I/O cables securely to the designated connectors. Contact failures may cause malfunctions. • Perform wiring properly to the FX3U Series main unit and FX0N/FX2N Series extension equipment of the terminal block type in accordance with the following precautions. Failure to do so may cause electric shock, short-circuit, wire breakage, or damages to the product. - The disposal size of the cable end should follow the dimensions described in this manual. - Tightening torque should be between 0.5 to 0.8 N•m. • Observe the following items to wire the lines to the European terminal board. Ignorance of the following items may cause electric shock, short circuit, disconnection, or damage of the product. - The disposal size of the cable end should follow the dimensions described in this manual. - Tightening torque should be between 0.22 to 0.25 N•m. - Twist the end of strand wire and make sure there is no loose wires. - Do not solder-plate the electric wire ends. - Do not connect electric wires of unspecified size or beyond the specified number of electric wires. - Fix the electric wires so that the terminal block and connected parts of electric wires are not directly stressed. • Properly perform wiring to the FX Series terminal blocks following the precautions below in order to prevent electrical shock, short-circuit, breakage of wire, or damage to the product: - The disposal size of the cable end should follow the dimensions described in this manual. - Tightening torque should be between 0.5 to 0.8 N•m.	B-4 B-22 B-67

3. STARTUP AND MAINTENANCE PRECAUTIONS

DANGER	Reference
• Do not touch any terminal while the PLC's power is on. Doing so may cause electrical shock or malfunctions. • Before cleaning or retightening terminals, externally cut off all phases of the power supply. Failure to do so may expose you to shock hazard. • Before modifying the program under operation or performing operation for forcible output, running or stopping, carefully read the manual, and sufficiently ensure the safety. An operation error may damage the machine or cause accidents.	B-5 B-68

CAUTION	Reference
• Do not disassemble or modify the PLC. Doing so may cause failures, malfunctions or fire. For repair, contact your local Mitsubishi Electric distributor. • Before connecting or disconnecting any extension cable, turn off power. Failure to do so may cause unit failure or malfunctions. • Before attaching or detaching the following devices, turn off power. Failure to do so may cause device failure or malfunctions. - Peripheral devices, expansion boards and special adapters - I/O extension blocks/units and terminal blocks	B-5 B-68

4. DISPOSAL PRECAUTIONS

CAUTION	Reference
• Please contact a company certified in the disposal of electronic waste for environmentally safe recycling and disposal of your device.	B-14

5. TRANSPORTATION PRECAUTIONS

CAUTION	Reference
• Before transporting the PLC, turn on the PLC to check that the BATT LED lamp is off and check the battery life. If the PLC is transported with the BATT LED lamp on or the battery exhausted, the backed up data may be unstable during transportation. • The PLC is precision equipment. During transportation, avoid impacts larger than that is specified in the manual of the PLC main unit. Failure to do so may cause failures in the PLC. After transportation, check the operations of the PLC.	B-14

FX3U/FX3UC Series Programmable Controllers

User's Manual [Positioning Control Edition]

Manual number	JY997D16801
Manual revision	A
Date	7/2005

Foreword

This manual describes "positioning" function of the MELSEC-F FX3U/FX3UC Series PLC and should be read and understood before attempting to install or use the unit.
Store this manual in a safe place so that you can take it out and read it whenever necessary. Always forward it to the end user.

This manual confers no industrial property rights or any rights of any other kind, nor does it confer any patent licenses. Mitsubishi Electric Corporation cannot be held responsible for any problems involving industrial property rights which may occur as a result of using the contents noted in this manual.

© 2005 MITSUBISHI ELECTRIC CORPORATION

Outline Precautions

- This manual provides information for the use of the FX3U Series Programmable Controllers. The manual has been written to be used by trained and competent personnel. The definition of such a person or persons is as follows;
  1) Any engineer who is responsible for the planning, design and construction of automatic equipment using the product associated with this manual should be of a competent nature, trained and qualified to the local and national standards required to fulfill that role. These engineers should be fully aware of all aspects of safety with regards to automated equipment.
  2) Any commissioning or service engineer must be of a competent nature, trained and qualified to the local and national standards required to fulfill that job. These engineers should also be trained in the use and maintenance of the completed product. This includes being completely familiar with all associated documentation for the said product. All maintenance should be carried out in accordance with established safety practices.
  3) All operators of the completed equipment should be trained to use that product in a safe and coordinated manner in compliance to established safety practices. The operators should also be familiar with documentation which is connected with the actual operation of the completed equipment.

  Note: the term 'completed equipment' refers to a third party constructed device which contains or uses the product associated with this manual
- This product has been manufactured as a general-purpose part for general industries, and has not been designed or manufactured to be incorporated in a device or system used in purposes related to human life.
- Before using the product for special purposes such as nuclear power, electric power, aerospace, medicine or passenger movement vehicles, consult with Mitsubishi Electric.
- This product has been manufactured under strict quality control. However when installing the product where major accidents or losses could occur if the product fails, install appropriate backup or failsafe functions in the system.
- When combining this product with other products, please confirm the standard and the code, or regulations with which the user should follow. Moreover, please confirm the compatibility of this product to the system, machine, and apparatus with which a user is using.
- If in doubt at any stage during the installation of the product, always consult a professional electrical engineer who is qualified and trained to the local and national standards. If in doubt about the operation or use, please consult the nearest Mitsubishi Electric distributor.
- Since the examples indicated by this manual, technical bulletin, catalog, etc. are used as a reference, please use it after confirming the function and safety of the equipment and system. Mitsubishi Electric will accept no responsibility for actual use of the product based on these illustrative examples.
- This manual content, specification etc. may be changed without a notice for improvement.
- The information in this manual has been carefully checked and is believed to be accurate; however, if you have noticed a doubtful point, a doubtful error, etc., please contact the nearest Mitsubishi Electric distributor.

Registration

- Microsoft® and Windows® are either registered trademarks or trademarks of Microsoft Corporation in the United States and/or other countries.
- The company name and the product name to be described in this manual are the registered trademarks or trademarks of each company.

Table of Contents

SAFETY PRECAUTIONS 1
Functions and Use of This Manual 9
Related Manuals 10
Generic Names and Abbreviations Used in Manuals 12

A. Common Items

Description of Manual (Common Items) A-2

1. Introduction A-3

1.1 Outline A-3
1.2 Introduction of Products Needed for Positioning A-4
1.2.1 List of Models A-4
1.2.2 Main Unit (Transistor Output) A-5
1.2.3 Special Adapter A-5
1.2.4 Special Function Unit/Block A-6

2. Unit Connection A-8

2.1 FX3U PLC A-8
2.2 FX3UC PLC A-9
2.3 Individual Operation of Special Function Unit (FX2N-10GM, FX2N-20GM) A-10

3. Comparison of Specifications A-11

3.1 Comparison of Performance Specifications A-11
3.1.1 Incorporated Positioning Function [Main Unit (Transistor Output), High-Speed Output Special Adapter (FX3U-2HSY-ADP)] A-11
3.1.2 Pulse Output Special Function Block [FX2N-1PG(-E), FX2N-10PG] A-12
3.1.3 Positioning Special Function Unit [FX2N-10GM, FX2N-20GM] A-13
3.2 Comparison of Operation Modes A-14

B. Built-in Positioning Function

Description of Manual (Built-in Positioning Function) B-2

1. Outline B-3

1.1 Features B-3
1.2 Setup Procedure for Positioning Control B-4
1.3 Version Numbers of Compatible PLCs B-7
1.4 Version Numbers of Compatible Programming Tools B-8
1.5 Assignment of Input/Output Numbers B-8
1.5.1 Assignment of Input Numbers B-8
1.5.2 Assignment of Output Numbers B-10
1.5.3 Connection of High-Speed Output Special Adapter B-12

2. Specifications B-14

2.1 General Specifications B-15
2.2 Power Supply Specifications B-15
2.3 Performance Specifications B-16
2.4 Input Specifications B-17
2.4.1 FX3U Series main unit (24V DC Input) B-17
2.4.2 FX3UC Series main unit (24V DC Input) B-18
2.5 Output Specifications B-19
2.5.1 FX3UC Series main unit (Transistor Output) B-19
2.5.2 High-Speed Output Special Adapter [FX3U-2HSY-ADP] B-20
2.6 List of Functions B-21

3. Connection of Input/Output Lines and Tightening Torques B-22

3.1 Terminal Board (M3, M3.5) B-23
3.1.1 Terminal Screw Size B-23
3.1.2 Termination B-23
3.2 European Terminal Board B-24
3.2.1 Cable B-24
3.2.2 Termination of Cable End B-24
3.2.3 Tool B-24
3.3 Connector B-25
3.3.1 Cable Connection To Input/Output Connector B-25
3.3.2 Setup of Input/Output Connection Connector B-25

4. Before Programming B-27

4.1 List of Related Devices B-27
4.1.1 Special Auxiliary Relays B-27
4.1.2 Special Data Registers B-28
4.2 Setting of Various Items Regarding Speeds B-29
4.2.1 Setting of Various Items Regarding Instructions and Speeds B-29
4.2.2 Setting of Output Pulse Frequency (DVIT, PLSV, DRVI, and DRVA Instructions) B-31
4.2.3 Setting of Zero Return Speed (DSZR/ZRN Instruction) B-32
4.2.4 Setting of Creep Speed (DSZR/ZRN Instruction) B-33
4.2.5 Setting of Maximum Speed B-33
4.2.6 Setting of Bias Speed B-34
4.2.7 Setting of Acceleration Time B-34
4.2.8 Setting of Deceleration Time B-34

4.3 Various Flags for Operation Commands B-35
4.3.1 Forward Rotation Limit and Reverse Rotation Limit B-35
4.3.2 Immediate Stoppage of Pulse Output (Pulse Output Stop Command Flag) B-36
4.3.3 Designation of Zero Return Direction (DSZR/ZRN Instruction) B-36
4.3.4 CLEAR Signal Output (DSZR/ZRN Instruction) B-38
4.3.5 Change in Logic of Near-Point (DOG) Signal (DSZR Instruction) B-39
4.3.6 Change in Logic of Zero-Phase Signal (DSZR Instruction) B-39
4.3.7 Designation of interrupt input Signal for DVIT Instruction B-40
4.3.8 Change in Logic of interrupt input Signal (DVIT Instruction) B-41
4.3.9 Acceleration/Deceleration by PLSV Instruction B-42
4.4 Flag for Monitoring of Current Value and Operation B-43
4.4.1 Current Value B-43
4.4.2 Completion of Execution of Instruction ("Instruction execution complete" Flag, "Instruction execution abnormal end" Flag) B-44
4.4.3 "Pulse Output Monitor" (BUSY/READY) Flag B-44
4.4.4 "Positioning Instruction Activation" Flag B-44
4.5 Setting of Various Items on PLC Side B-45
4.5.1 Setting of Common Items Using Program B-45
4.5.2 Setting of High-Speed Output Special Adapter B-49
4.6 Setting of Various Items on Servo Amplifier (Drive Unit) Side B-51
4.6.1 Setting of Command Pulse Input Method B-51
4.6.2 Setting of Electronic Gear (For MELSERVO Series) B-55
4.6.3 Setting of "Servo Ready" Signal (MELSERVO MR-C Series) B-56
4.7 Items To Be Observed in Programming B-57
4.7.1 Positioning Instruction Activation Timing B-57
4.7.2 STOP instruction B-59
4.7.3 Correction of Backlash B-59
4.7.4 "Instruction execution complete" Flag of Positioning Instruction and Completion of Positioning B-59
4.7.5 Operation Error Flag B-62
4.7.6 Writing Data in RUN Mode B-62
4.8 Items To Be Observed in Use of Main Unit (Transistor Output) B-63
4.9 Caution for Using the High-Speed Output Special Adapter (FX3U-2HSY-ADP) B-63
4.10 Format and Execution of Applied Instruction B-65

5. Operation Test B-67

5.1 Test Procedure B-69
5.2 Creation of Test Program B-73

6. Mechanical Zero Return (DSZR/ZRN Instruction) B-75

6.1 Types of Mechanical Zero Return Instructions B-75
6.2 DOG Search Zero Return (DSZR Instruction) B-76
6.2.1 Instruction Format B-76
6.2.2 List of Related devices B-77
6.2.3 Function and Operation B-79
6.2.4 Important Points B-85
6.3 Zero Return (ZRN Instruction) B-86
6.3.1 Instruction Format B-86
6.3.2 List of Related devices B-87
6.3.3 Function and operation B-88
6.3.4 Important Points B-92

7. Absolute Position Detection System (Absolute Current Value Read)-ABS Instruction B-93

7.1 Instruction Format B-93
7.2 List of Related Devices B-94
7.3 Function and Operation....B-94
7.4 Initial Zero Return....B-95
7.5 Important Points B-95

8. 1-Speed Positioning - DRVI/DRVA Instruction B-96

8.1 Incremental Method and Absolute Method B-96
8.2 Drive to Increment - DRVI Instruction B-98
8.2.1 Instruction Format....B-98
8.2.2 List of Related Devices....B-99
8.2.3 Function and Operation B-101
8.2.4 Important Points B-102
8.3 Drive To Absolute (DRVA Instruction)....B-103
8.3.1 Instruction Format....B-103
8.3.2 List of Related Devices....B-105
8.3.3 Function and Operation B-106
8.3.4 Important Points B-107

9. One-speed Interrupt constant quantity feed -DVIT Instruction B-108

9.1 Instruction Format B-108
9.2 List of Related Devices B-110
9.3 Function and Operation....B-112
9.4 Important Points B-117

10. Variable Speed Operation (Variable Speed Pulse Output)-PLSV Instruction B-119

10.1 Instruction Format B-119
10.2 List of Related Devices B-121
10.3 Function and Operation....B-122
10.3.1 Operation without Acceleration/Deceleration (M8338 = OFF)....B-122
10.3.2 Operation with Acceleration/Deceleration (M8338 = ON) B-123
10.4 Important Points B-125

11. Batch Data Positioning Mode (TBL Instruction) B-126

11.1 Instruction Format B-126
11.2 List of Related Devices B-127
11.3 Function and Operation....B-129
11.4 Positioning Parameter Setting....B-130
11.4.1 Positioning Parameter Setting Using GX Developer B-130
11.4.2 Changing of Set Positioning Parameters (Number of Pulses and Frequency)....B-135

12. Examples of Programs B-137

12.1 Input/Output Assignment....B-138
12.2 Programs for Forward/Reverse Rotation (Relay Ladder Program)....B-140
12.2.1 Example of Program....B-140
12.3 Programs for Forward/Reverse Rotation (Step Ladder (STL) Program)....B-143
12.3.1 Example of Program....B-143
12.4 Positioning Using Batch Setting Method....B-147
12.4.1 Setting Using GX Developer....B-147
12.4.2 Operation Program....B-149
12.5 Program for Reading Current ABS Value Using ABS Instruction....B-152

13. Troubleshooting B-153

13.1 LED Indicator Lamp Check....B-153
13.1.1 POWER Indicator Lamp (Statuses: ON, flashing, OFF)....B-153
13.1.2 RUN Indicator Lamp (Statuses: ON, OFF)....B-153
13.1.3 BATT Indicator Lamp (Statuses: ON, OFF)....B-154
13.1.4 ERROR indicator lamp (Statuses: ON, flashing, OFF)....B-154
13.1.5 Pulse Output Destination Device and Rotation Direction Output Indicator Lamp....B-155
13.2 Error Check....B-157
13.2.1 Error Code Check Method....B-157
13.2.2 Error Codes....B-158
13.3 If the Servo Motor or the Stepping Motor Does Not Operate....B-159
13.4 If Operation Is Stopped at a Wrong Position....B-160

Appendix: Example Connection

Description of Manual (Example of Connection) Apx.-2

Appendix 1. MELSERVO-J3 Series Apx.-3

Appendix 1-1 Main Unit (Transistor Output) Apx.-3
Appedix 1-1-1 Sink Input and Sink Output Apx.-3
Appendix 1-2 High-Speed Output Special Adapter Apx.-5
Appedix 1-2-1 Sink Input, Sink Output (Transistor), and Differential Line Driver Output..... Apx.-5
Appendix 1-3 Absolute Position Detection (Transistor Output) Apx.-6
Appendix 1-3-1 Sink Input and Sink Output Apx.-6

Appendix 2. MELSERVO-J2 (-Super) Series Apx.-8

Appendix 2-1 Main Unit (Transistor Output) Apx.-8
Appendix 2-1-1 Sink Input and Sink Output Apx.-8
Appendix 2-2 High-Speed Output Special Adapter Apx.-10
Appendix 2-2-1 Sink Input, Sink Output (Transistor), and Differential Line Driver Output..... Apx.-10
Appendix 2-3 Absolute Position Detection (Transistor Output) Apx.-11
Appendix 2-3-1 Sink Input and Sink Output Apx.-11

Appendix 3. MELSERVO-H Series Apx.-13

Appendix 3-1 Main Unit (Transistor Output) Apx.-13
Appendix 3-1-1 Sink Input and Sink Output Apx.-13
Appendix 3-2 Absolute Position Detection (Transistor Output) Apx.-14
Appendix 3-2-1 Sink Input and Sink Output Apx.-14

Appendix 4. MELSERVO-C Series Apx.-15

Appendix 4-1 Main Unit (Transistor Output) Apx.-15
Appendix 4-1-1 Sink Input and Sink Output Apx.-15
Appendix 4-2 High-Speed Output Special Adapter Apx.-17
Appendix 4-2-1 Sink Input, Sink Output, and Differential Line Driver Output Apx.-17

Warranty i

Revised History ii

Functions and Use of This Manual

The FX3U/FX3UC PLC outputs transistor signals from the main unit and also outputs pulses from the high-speed output adapter and the positioning special function unit/block to the servo motor and stepping motor to properly control the positioning operation.

PLC

FX3U Series

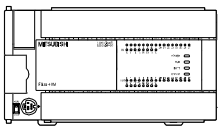

FX3UC Series

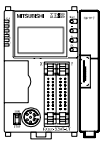

Regarding wiring and installation of PLC:

- Hardware manual (The hardware manual is enclosed with the product.) — Enclosed with the product
- User's Manual - Hardware Edition — Separate document

Regarding sequence program:

- Programming manual — Separate document

Regarding positioning function:

- FX3U/FX3UC Series PLC User's Manual- Positioning Control Edtion — Separate document

This document — This document describes built-in positioning function setting method, examples of connection, examples of programs, details of troubleshooting, etc.

Products needed for positioning

FX3U-2HSY-ADP

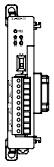

Special function unit/block

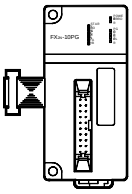

Either "INSTALLATION MANUAL" or "USER'S MANUAL" is enclosed with each product.
For details, refer to "User's Manual - Positioning Control Edition" (this document) or the manual of the product.

Regarding installation and parts names:

- INSTALLATION MANUAL The separate document, however, is needed to know the details of programming. — Enclosed with the product

Regarding installation, parts names, operation, and programs:

- USER'S MANUAL This manual provides the necessary information. — Supplied with the product / Separate document
- HARDWARE/PROGRAMMING MANUAL This manual provides the necessary information. — Separate document

Servo motor (stepping motor)

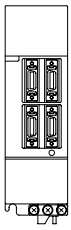

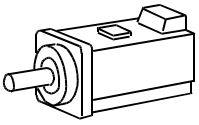

Obtain the instruction manual of the servo motor to be connected to your system. This manual will be needed to set the parameters for the servo amplifier (drive unit) or wire the servo amplifier.

Related Manuals

Refer to this document to perform positioning operation using the FX3U/FX3UC Series.
For the hardware information on the PLC and for details on special function units/blocks, refer to the respective manuals.
If you want to know what manuals are needed for your system, please contact your dealer.

⊙Indispensable manual
✓Manual that may be indispensable depending on the purpose of use
△With separate document that describes the details

		Title of manual	Document number	Description	Model code
Manuals for PLC					
■FX3U Series PLC					
△	Enclosed with the product	FX3U Series HARDWARE MANUAL	JY997D18601	The input/output specifications and the wiring and installation methods for the FX3U PLC are excerpted from the FX3U Series User's Manual - Hardware Edition. For details, refer to the FX3U Series User's Manual - Hardware Edition.	-
⊙	Separate document	FX3U Series User's Manual - Hardware Edition	JY997D16501	Provides detailed information on the hardware, such as the input/output specifications and the detailed wiring, installation, and maintenance methods for the FX3U PLC.	09R516
■FX3UC Series PLC					
△	Enclosed with the product	FX3UC Series HARDWARE MANUAL	JY997D12701	The input/output specifications and the wiring and installation methods for the FX3UC PLC are excerpted from the User's Manual for FX3UC Series (for Hardware). For details, refer to the User's Manual for FX3UC Series (for Hardware).	-
⊙	Separate document	FX3UC Series User's Manual - Hardware Edition	JY997D11601	Provides detailed information on the hardware, such as the input/output specifications and the detailed wiring, installation, and maintenance methods for the FX3UC PLC.	09R513
■Programming					
⊙	Separate document	FX3U/FX3UC Series Programming Manual - Basic & Application Instruction Edition	JY997D16601	Describes the basic instructions, applied instructions, and various devices of the FX3U/FX3UC PLC to provide the detailed information on sequence programming.	09R517

Note:

FX3UC Series PLC Manuals are available only in Japanese.

Manuals for positioning control					
■Common					
✓	Separate document	FX3U/FX3UC Series User's Manual - Positioning Control Edition (this document)	JY997D16801	Provides the detailed information on the positioning functions incorporated in the FX3U/FX3UC Series.	09R620

⊙Indispensable manual
✓Manual that may be indispensable depending on the purpose of use
△With separate document that describes the details

		Title of manual	Document number	Description	Model code
■Pulse output, positioning **To use each product, also refer to the user's manual (for hardware) of the PLC to be connected to your system.**					
△	Enclosed with the product	FX3U-2HSY-ADP Installation Manual	JY997D16401	Describes how to handle high-speed output special adapter. To use this adapter, also refer to the User's Manual for FX3U/FX3UC Series (for positioning Control).	-
✓	Enclosed with the product	FX2N/FX-1PG User's Manual	JY992D65301	Describes how to handle the 1-axis pulse output special function block.	09R610
△	Enclosed with the product	FX2N-10PG Installation Manual	JY992D91901	Describes how to handle the 1-axis pulse output special function block. To use this block, also refer to FX2N-10PG USER'S MANUAL.	-
✓	Separate document	FX2N-10PG User's Manual	JY992D93401	Provides the detailed information on the 1-axis pulse output special function block.	09R611
△	Enclosed with the product	FX2N-10GM User's Guide	JY992D77701	Describes how to handle the 1-axis positioning special function unit. To use this unit, also refer to FX2N-10GM/FX2N-20GM HARDWARE/ PROGRAMMING MANUAL.	-
△	Enclosed with the product	FX2N-20GM User's Guide	JY992D77601	Describes how to handle the 2-axis positioning special function unit. To use this unit, also refer to FX2N-10GM/FX2N-20GM HARDWARE/ PROGRAMMING MANUAL.	-
✓	Separate document	FX2N-10GM/FX2N-20GM HARDWARE/ PROGRAMMING MANUAL	JY992D77801	Provides the detailed information on the 1-axis/2-axis positioning special function unit.	09R612

Generic Names and Abbreviations Used in Manuals

Generic name or abbreviation	Description
PLC	
FX3U series	Generic name for FX3U Series PLC
FX3U PLC or main unit	Generic name for FX3U Series PLC main unit
FX3UC series	Generic name for FX3UC Series PLC
FX3UC PLC or main unit	Generic name for FX3UC Series PLC main unit Only manuals in Japanese are available for these products.
FX2N Series	Generic name for FX2N Series PLC
FX2NC Series	Generic name for FX2NC Series PLC
Expansion board	
Expansion board	Generic name for expansion board The number of connectable units, however, depends on the type of main unit. To check the number of connectable units, refer to the User's Manual - Hardware Editon of main unit to be used for your system.
Special adapter	
Special adapter	Generic name for high-speed input/output special adapter, communication special adapter, and analog special adapter The number of connectable units, however, depends on the type of main unit. To check the number of connectable units, refer to the User's Manual - Hardware Editon of main unit to be used for your system.
High-speed input/output special adapter	Generic name for high-speed input/output special adapter
High-speed output special adapter	Generic name for high-speed output special adapter
2HSY-ADP	FX3U-2HSY-ADP
High-speed input special adapter	Generic name for high-speed input special adapter
Communication special adapter	Generic name for communication special adapter
Analog special adapter	Generic name for analog special adapter
Extension unit	
Extension unit	Generic name for input/output extension unit and special extension unit The number of connectable units, however, depends on the type of main unit. To check the number of connectable units, refer to the User's Manual - Hardware Editon of main unit to be used for your system.
Input/output extension unit	Generic name for input extension unit and output extension unit The number of connectable units, however, depends on the type of main unit. To check the number of connectable units, refer to the User's Manual - Hardware Editon of main unit to be used for your system.
Input extension unit	Generic name for FX2N Series input/output powered extension unit, input extension block, FX2NC Series input extension block, and FX0N Series input extension block The number of connectable units, however, depends on the type of main unit. To check the number of connectable units, refer to the User's Manual - Hardware Editon of main unit to be used for your system.
Output extension unit	Generic name for FX2N Series input/output powered extension unit, output extension block, FX2NC Series output extension block, and FX0N Series output extension block The number of connectable units, however, depends on the type of main unit. To check the number of connectable units, refer to the User's Manual - Hardware Editon of main unit to be used for your system.

Generic name or abbreviation	Description
Extension unit	
Special function unit/block or Special extension unit	Generic name for special function unit and special function block The number of connectable units, however, depends on the type of main unit. To check the number of connectable units, refer to the User's Manual - Hardware Edition of main unit to be used for your system.
Special function unit	Generic name for special function unit
Special function block	Generic name for special function block The number of connectable units, however, depends on the type of main unit. To check the number of connectable units, refer to the User's Manual - Hardware Edition of main unit to be used for your system.
Positioning special function unit	Generic name for the following models: FX2N-10GM, FX2N-20GM
Pulse output special function block	Generic name for the following models: FX2N-1PG-E, FX2N-1PG, FX2N-10PG
FX2N-1PG(-E)	Generic name for the following models: FX2N-1PG-E, FX2N-1PG
Optional unit	
Extension power supply unit	FX3UC-1PS-5V
Memory cassette	FX3U-FLROM-16, FX3U-FLROM-64, FX3U-FLROM-64L
Battery	FX3U-32BL
FX Series terminal block	FX-16E-TB, FX-32E-TB, FX-16EX-A1-TB, FX16EYR-TB, FX-16EYS-TB, FX-16EYT-TB
Input/output cable	FX-16E-500CAB-S, FX-16E-□□□CAB, FX-16E-□□□CAB-R, FX-A32E-□□□CAB □□□ represents 150, 300, or 500.
Input/output connector	FX2C-I/O-CON, FX2C-I/O-CON-S, FX2C-I/O-CON-SA
Power cable	FX2NC-100MPCB, FX2NC-100BPCB, FX2NC-10BPCB1
Peripheral unit	
Peripheral unit	Generic name for programming software, handy programming panel, and indicator
Programming tool	
Programming tool	Generic name for programming software and handy programming panel
Programming software	Generic name for programming software
GX Developer	Generic name for SW□D5C-GPPW-J/SW□D5C-GPPW-E programming software package
FX-PCS/WIN(-E)	Generic name for FX-PCS/WIN or FX-PCS/WIN-E programming software package
Handy programming panel (HPP)	Generic name for FX-20P(-E) and FX-10P(-E)
Indicator	
GOT1000 series	Generic name for GT15 and GT11
GOT-900 series	Generic name for GOT-A900 series and GOT-F900 series
GOT-A900 series	Generic name for GOT-A900 series
GOT-F900 series	Generic name for GOT-F900 series
ET-940 series	Generic name for ET-940 series Only manuals in Japanese are available for there products
Drive unit for servo motor and stepping motor	
Servo motor	Generic name for servo motor or stepping motor Including pulse input type servo amplifier and drive unit.
Servo amplifier (drive unit)	Generic name for pulse input type servo amplifier (drive unit)
MELSERVO series	Generic name for MELSERVO-J3, -J2-Super, -J2, -H, and -C series
Other unit	
Manual pulse generator	Generic name for manual pulse generator (prepared by user)

Generic name or abbreviation	Description
Manual	
Manual for FX3U hardware	FX3U Series User's Manual - Hardware Edition
Manual for FX3UC hardware	This manual is available only in Japanese.
Programming manual	FX3U/FX3UC Series Programming Manual - Basic and Applied Instructions Edition
Communication control manual	FX Series User's Manual - Data Communication Edition
Analog control manual	FX3U/FX3UC Series User's Manual - Analog Control Edition
Positioning control manual	FX3U/FX3UC Series User's Manual - Positioning Control Edition

FX3U/FX3UC Series Programmable Controllers

User's Manual [Positioning Control Edition]
A. Common Items

Foreword

"Common Items" describes the outline of "positioning" function incorporated in the MELSEC-F FX3U/FX3UC Series PLC and should be read and understood before attempting to install or use the unit.
Store this manual in a safe place so that you can take it out and read it whenever necessary. Always forward it to the end user.

This manual confers no industrial property rights or any rights of any other kind, nor does it confer any patent licenses. Mitsubishi Electric Corporation cannot be held responsible for any problems involving industrial property rights which may occur as a result of using the contents noted in this manual.

© 2005 MITSUBISHI ELECTRIC CORPORATION

Description of Manual (Common Items)

In this manual, the following formats are used for the description of common items:

Shows the title of the manual and the title of the division.
This area shows the title of the manual and the title of the division for the page currently opend.
1st line: Shows the title of the manual.
2nd line: Shows the title of the division.

Shows the title of the chapter and the title of the section.
This area shows the title of the chapter and the title of the section for the page currently opened.

Indexes the title of division.
The right side of each page indexes the title of the division for the page currently opened.

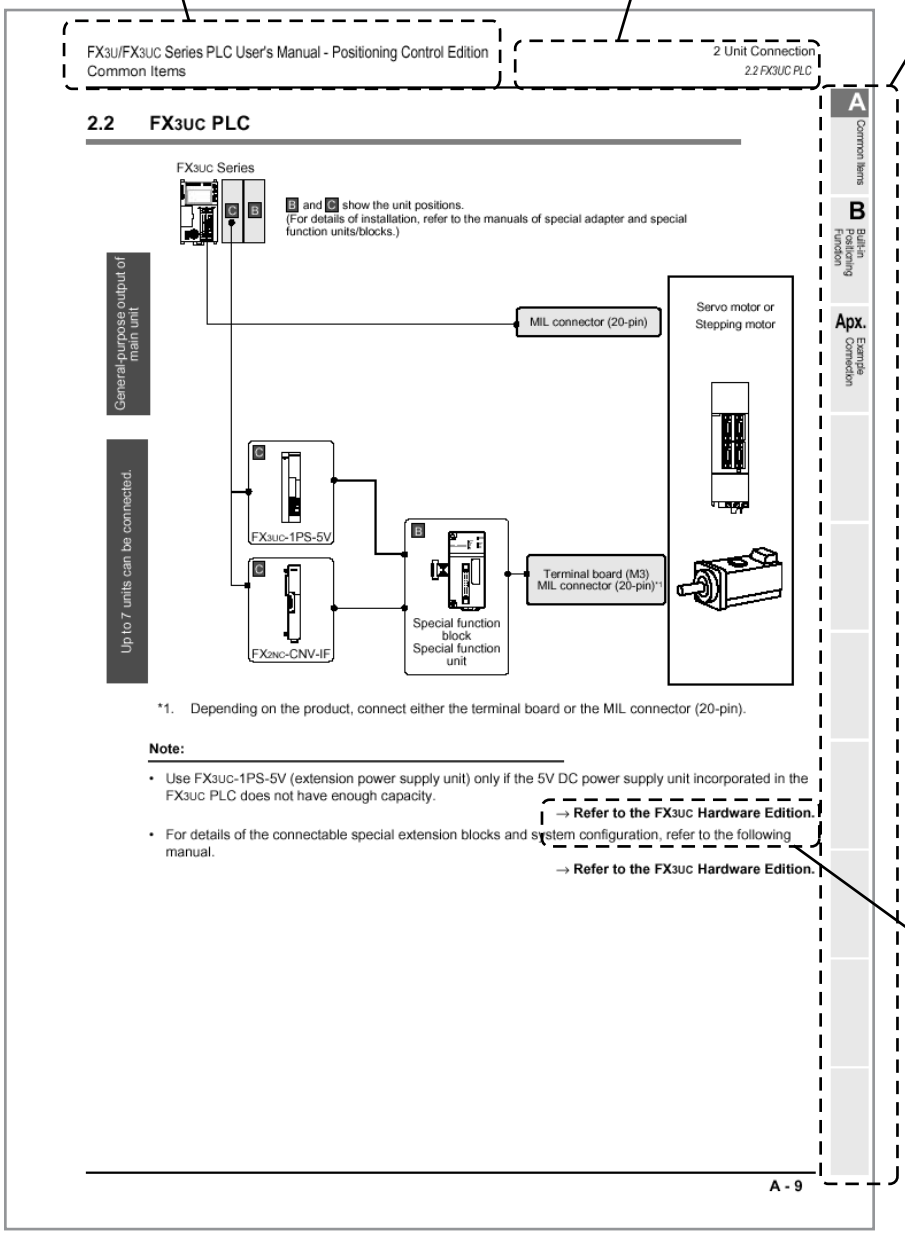

Shows the reference.
This area shows the reference document (the reference document is shown next to "→ ").
- If the reference is in "A. Common items" division, the chapter, section, or subsection number only will be shown next to "→ ".
- If the reference is in the other division, the chapter, section, or subsection number will be shown next to "→ " together with the title of the division.

1. Introduction

This manual describes the positioning control for the FX3U/FX3UC PLC.
In this chapter, various products needed for positioning are described.

1.1 Outline

The FX3U/FX3UC PLC outputs the pulse signal to the servo motor and the stepping motor to control the positioning operation.
Increase the pulse frequency to increase the motor speed. Increase the number of pulses to increase the number of motor revolutions. In other words, set the pulse frequency to determine the workpiece transfer (positioning) speed.
Set the number of pulses to determine the workpiece transfer distance.

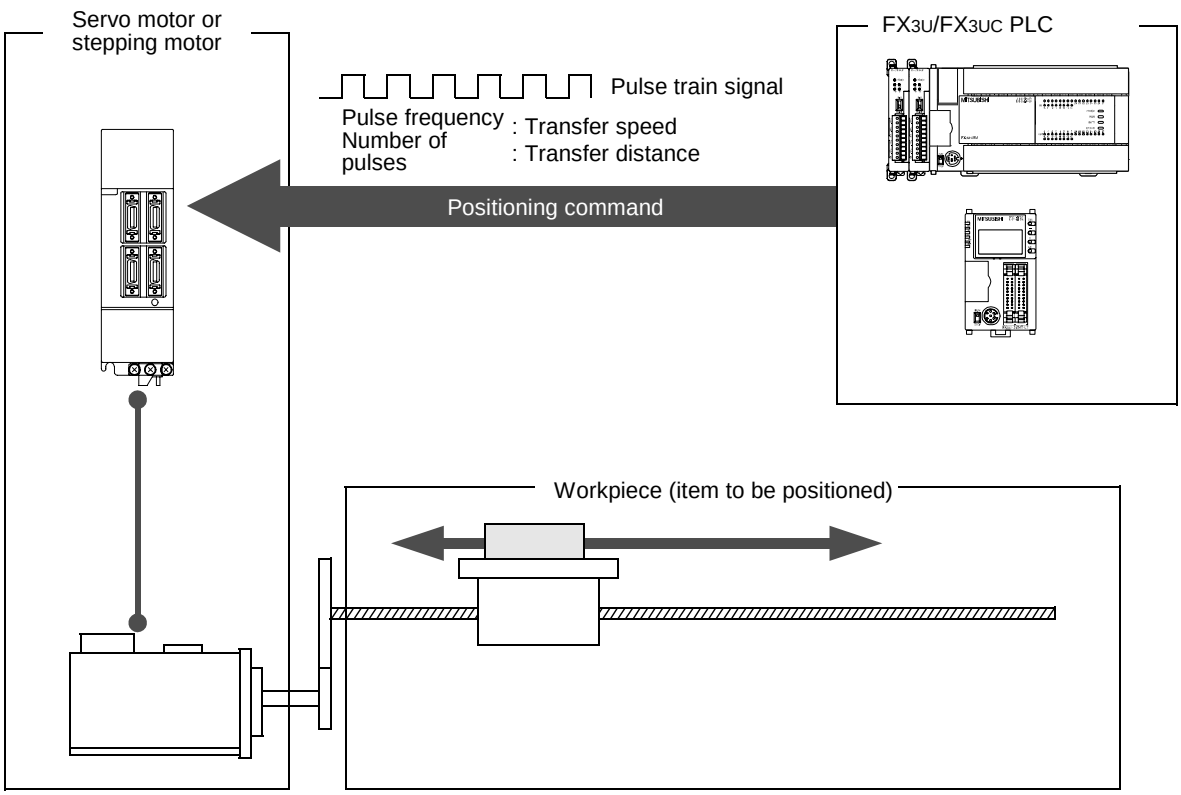

1.2 Introduction of Products Needed for Positioning

To control the positioning operation, use the positioning function incorporated in main unit (including special adapters), and also the special function units/blocks. The function, however, depends on the unit. Select units optimum for the purpose of use.

1.2.1 List of Models

The products needed for positioning are shown in the following table:

1. Main unit (transistor output) and special adapter

Model	Number of axes	Frequency (Hz)	Unit	Output system	Output method	Reference
Main unit (transistor output)						
FX3UC PLC	3-axes (independent)	10*3 to 100,000	pulse	Open collector system	"Pulse train + direction" method	B. Built-in Positioning Function
Special adapter						
FX3U-2HSY -ADP*1	2-axes*2 (independent)	10*3 to 200,000	pulse	Differential line driver system	"Pulse train + direction" method or "forward/reverse rotation pulse train" method	B. Built-in Positioning Function

*1. Can only be connected to the FX3U PLC.

*2. Connection of 1 adapter can control 2 axes. Connection of 2 adapters can control up to 4 axes.

*3. The minimum frequency set by PLSY instruction or PLSV instruction is "1 Hz".

→ **For details on PLSY instruction, refer to the programming manual.**

2. Special function unit/block

Model	Number of axes	Frequency (Hz)	Unit	Output system	Output method	Reference
Special function block						
FX2N-1PG(-E)	1-axis	10 to 100,000	pulse μm 10^{-4}inch mdeg	Open collector system	"Pulse train + direction" method or "forward/reverse rotation pulse train" method	*1
FX2N-10PG	1-axis	1 to 1,000,000	pulse μm 10^{-4}inch mdeg	Differential line driver system	"Pulse train + direction" method or "forward/reverse rotation pulse train" method	*1
Special function unit						
FX2N-10GM	1-axis	1 to 200,000	pulse μm 10^{-4}inch mdeg	Open collector system	"Pulse train + direction" method or "forward/reverse rotation pulse train" method	*1
FX2N-20GM	2-axes (independent/ interpolation)	1 to 200,000	pulse μm 10^{-4}inch mdeg	Open collector system	"Pulse train + direction" method or "forward/reverse rotation pulse train" method	*1

*1. For details on each special function unit/block, refer to the manual of the unit/block.

1.2.2 Main Unit (Transistor Output)

The FX3UC PLC incorporates the positioning function.
This PLC can output the open collector type pulse train of up to 100 kHz from the general-purpose outputs (Y000 to Y002), and can simultaneously control 3 axes.

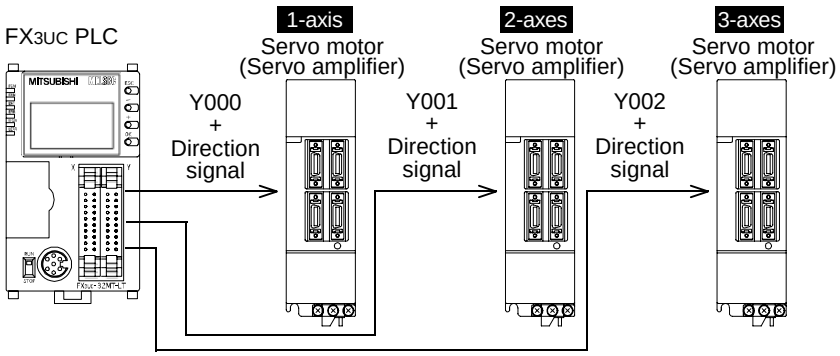

1.2.3 Special Adapter

Special adapter can output the differential line driver type pulse train of up to 200 kHz using the positioning function incorporated in the FX3U PLC, and can simultaneously control 4 axes.
Up to 2 high-speed output special adapters (FX3U-2HSY-ADP) can be connected to the FX3U PLC.

- The first FX3U-2HSY-ADP uses Y000 and Y004, and Y001 and Y005.
- The second FX3U-2HSY-ADP uses Y002 and Y006, and Y003 and Y007.

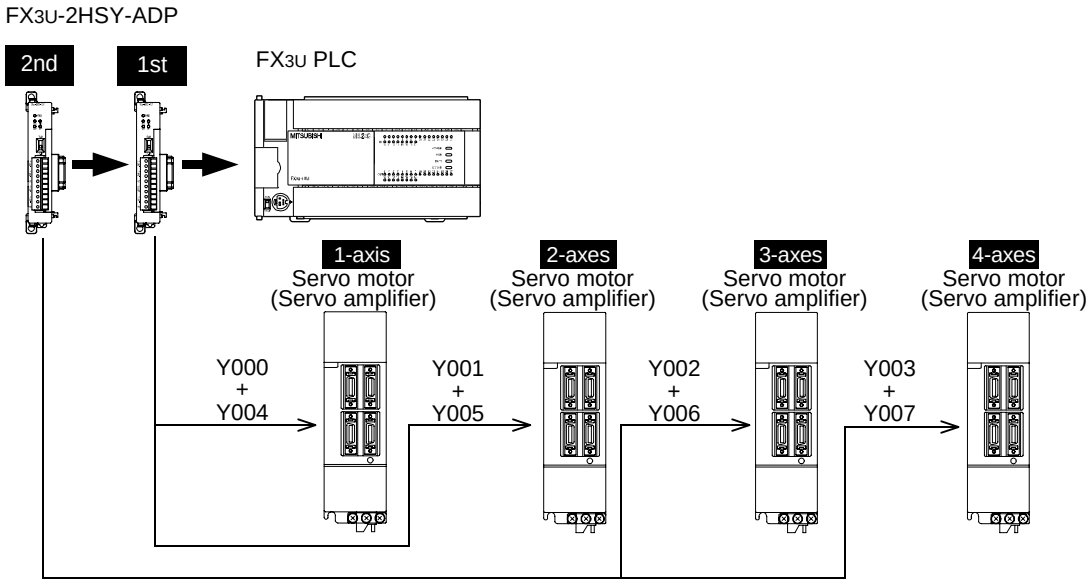

Cautions when connecting special adapters

- To use high-speed input/output special adapters only (not to use the other special adapters), it is not necessary to connect the expansion board.
- To use the analog communication special adapters, be sure to connect the expansion board.
- To use high-speed input/output special adapters together with the analog communication special adapters, connect high-speed output special adapters to the expansion board (already connected to the FX3U PLC) first, and then connect the analog special adapters and the communication special adapter.

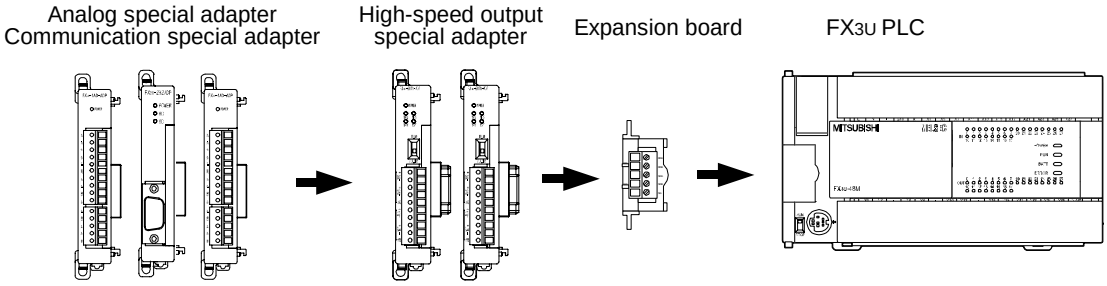

1.2.4 Special Function Unit/Block

Connect special function unit/block to the FX3U/FX3UC PLC to control the positioning operation. Note that special function unit can individually control the positioning operation.

1. System configuration for FX3U PLC

Up to 8 special function units/blocks can be connected to the FX3U PLC.

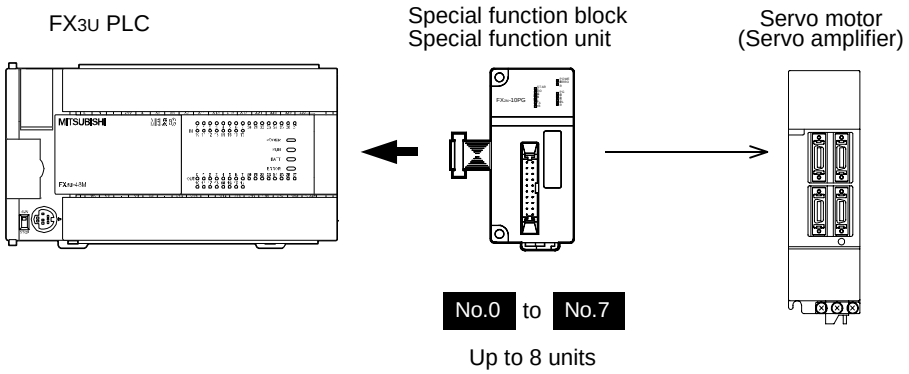

→ **For details on system configuration, refer to the FX3U Hardware Edition.**

2. System configuration for FX3UC PLC

Up to 7 special function units/blocks can be connected to the FX3UC PLC.
FX2NC-CNV-IF or FX3UC-1PS-5V is needed to connect special function units/blocks.

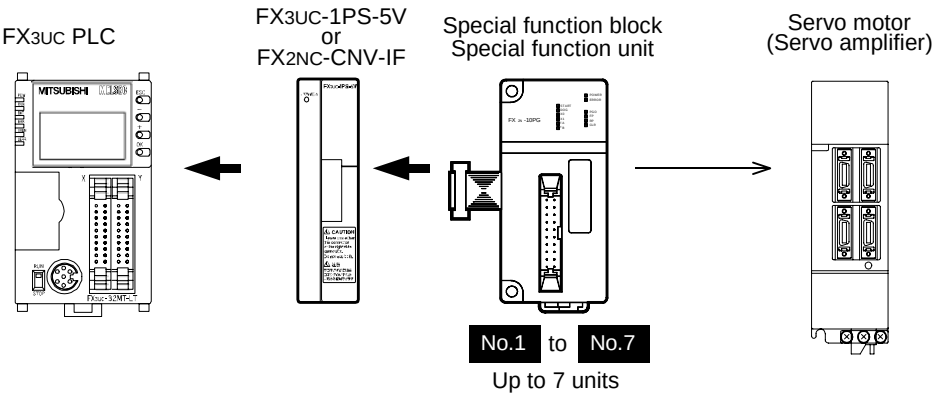

→ **For details on system configuration, refer to the FX3UC Hardware Edition.**

3. Individual operation (FX2N-10GM, FX2N-20GM)

Without connecting special function units (FX2N-10GM, FX2N-20GM) to the PLC, you can operate them individually.

- FX2N-10GM can control one 1-axis servo motor or stepping motor.
- FX2N-20GM can control two 1-axis servo motors or stepping motors.
  In addition, up to 48 I/O points can be added.

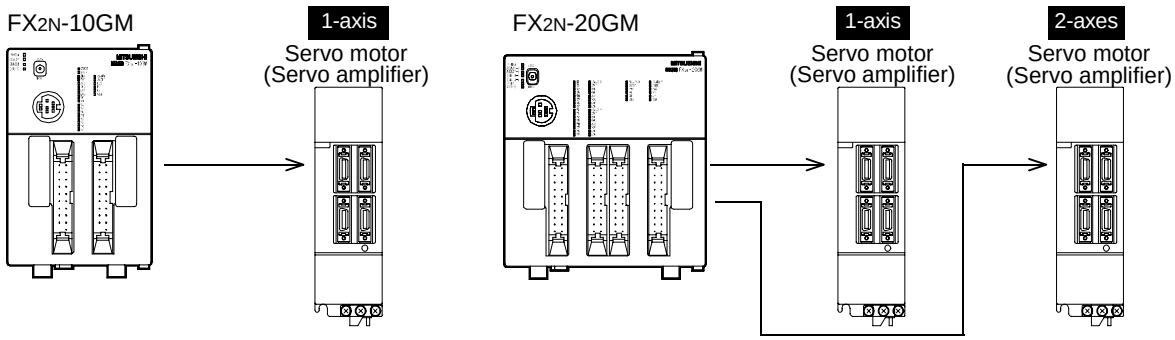

2. Unit Connection

This chapter shows various block diagrams to show various combinations of units needed for positioning control.

2.1 FX3U PLC

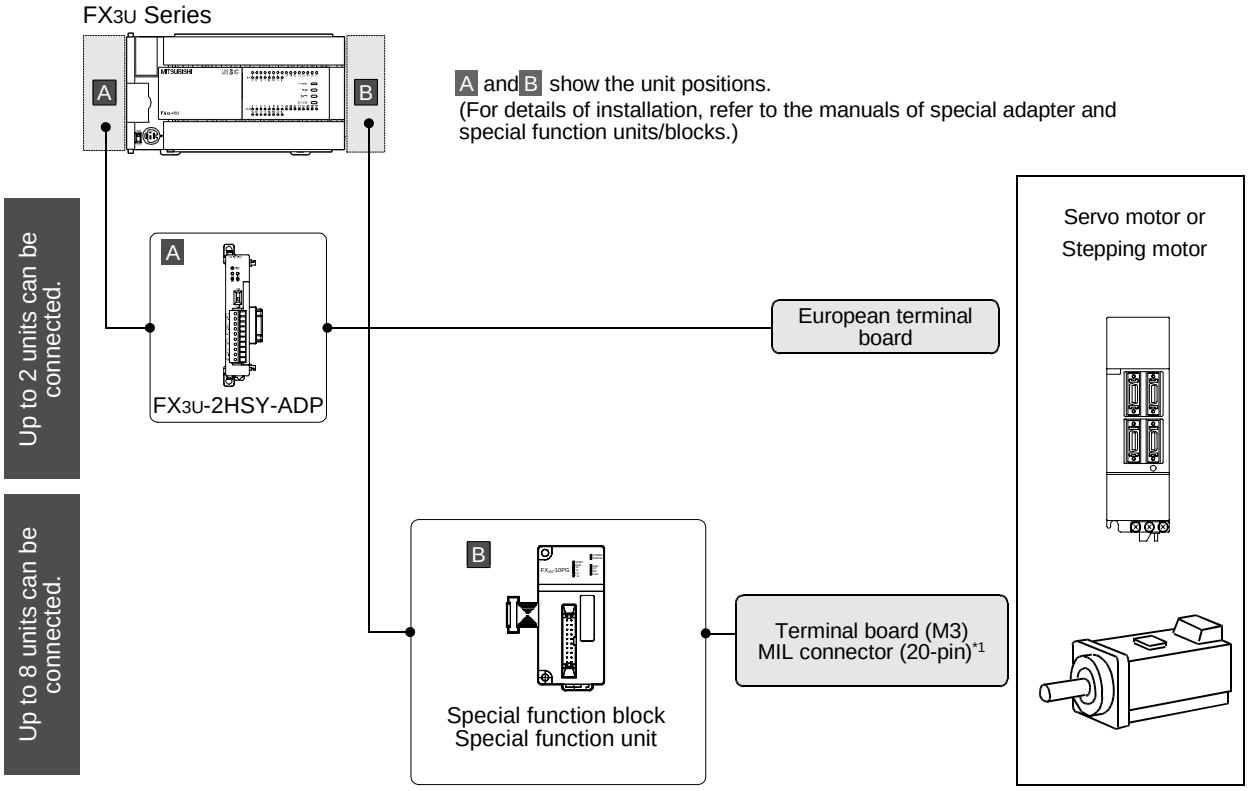

*1. Depending on the product, connect either the terminal board or the MIL connector (20-pin).

Note:

- To connect high-speed output special adapter, select main unit with enough input points for high speed inputting operation.
- For details on the connectable special function units/blocks and system configuration, refer to the following manual.

→ **Refer to the FX3U Hardware Edition.**

2.2 FX3UC PLC

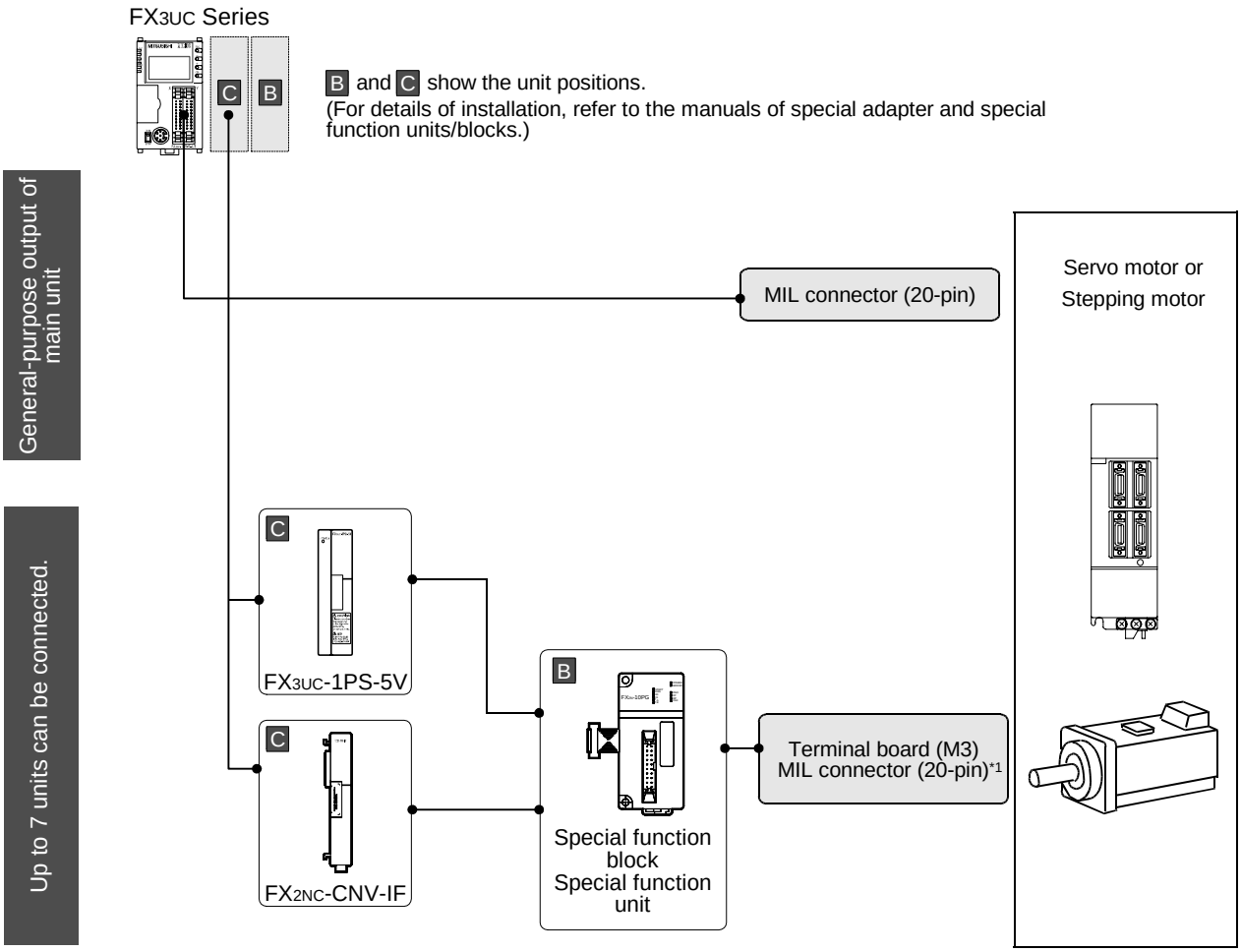

*1. Depending on the product, connect either the terminal board or the MIL connector (20-pin).

Note:

- Use FX3UC-1PS-5V (extension power supply unit) only if the 5V DC power supply unit incorporated in the FX3UC PLC does not have enough capacity.

  → **Refer to the FX3UC Hardware Edition.**

- For details of the connectable special extension blocks and system configuration, refer to the following manual.

  → **Refer to the FX3UC Hardware Edition.**

2.3 Individual Operation of Special Function Unit (FX2N-10GM, FX2N-20GM)

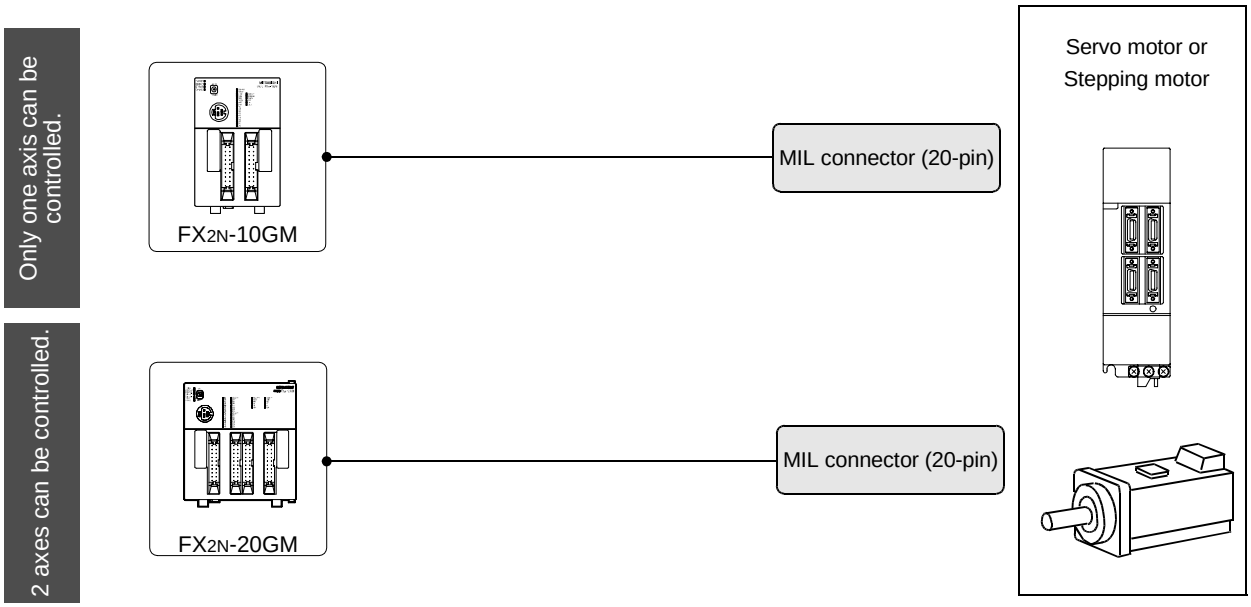

Note:

- For details of connection of FX2N-10GM or FX2N-20GM and system configuration, refer to the following manual.

→ **Refer to FX2N-10GM, FX2N-20GM HARDWARE/PROGRAMMING MANUAL.**

3. Comparison of Specifications

The specifications of each product needed for positioning are shown below. Select products optimum for your system.

3.1 Comparison of Performance Specifications

3.1.1 Built-in Positioning Function [Main Unit (Transistor Output), High-Speed Output Special Adapter (FX3U-2HSY-ADP)]

Model	FX3UC PLC (Main unit, transistor output)	FX3U-2HSY-ADP*1
Number of control axes	3 independent axes	2 independent axes
Interpolation	-	-
Pulse output system	Open collector system	Differential line driver system
Pulse output method	"Pulse train + direction" method	"Pulse train + direction" method "Forward/reverse rotation pulse train" method
Maximum frequency	100,000Hz	200,000Hz
Acceleration/ deceleration type	Automatic trapezoidal acceleration/deceleration	
Unit	pulse	
Positioning range	-999,999 to +999,999(pulse)	
Program language	Sequence program	
Position data	1 point (set in sequence program)	
Connection of manual pulse generator	-	-
Detection of absolute position (Reads out the current value of ABS.)	ABS instruction of the PLC	
Others	• Pulses can be output from the general-purpose outputs (Y000, Y001, and Y002) of main unit.	• Connect 2 adapters to main unit to control 4 axes independently. • Connect this adapter to main unit to use the differential line driver type pulse train. This is because main unit cannot output this type of pulse train. • Use this adapter in place of the general-purpose outputs (Y000 - Y007)*2 of main unit.

*1. Can only be connected to the FX3U PLC. Up to 2 adapters can be connected.

*2. If 2 adapters are connected, Y000 to Y007 will be used. If only one adapter is connected, Y000, Y001, Y004, and Y005 will be used. The relation between the output of FX3U-2HSY-ADP and the output of main unit is described in the following sections.

→ **For high-speed output special adapters, refer to Subsection 1.5.3 and Section 4.9 of "B. Built-in Positioning Function."**

3.1.2 Pulse Output Special Function Block [FX2N-1PG(-E), FX2N-10PG]

Model	FX2N-1PG(-E)	FX2N-10PG
Number of control axes	1 independent axes	
Interpolation	-	-
Pulse output system	Open collector system	Differential line driver system
Pulse output method	"Pulse train + direction" method "Forward/reverse rotation pulse train" method	
Maximum frequency	100,000Hz	1,000,000Hz
Acceleration/ deceleration type	Automatic trapezoidal acceleration/deceleration	Automatic trapezoidal acceleration/deceleration, approximate S-pattern acceleration/deceleration
Unit	pulse,μm,10^{-4}inch,mdeg	
Positioning range	-999,999 to +999,999 pulse -999,999 to +999,999 mm -999,999 to +999,999 inch -999,999 to +999,999 deg	-2,147,483,648 to +2,147,483,647 pulse -2,147,483,648 to +2,147,483,647 mm*1 -2,147,483,648 to +2,147,483,647 inch*1 -2,147,483,648 to +2,147,483,647 deg*1
Program language	Sequence program (FROM/TO instruction, BFM direct designation)	
Position data	1 point (set in sequence program)	1 point (set in sequence program)*2
Connection of manual pulse generator	-	Connectable (Differential line driver, open collector)
Detection of absolute position (Reads out the current value of ABS.)	Using the ABS instruction of the PLC	
Others	• PLC input/output: 8 points occupied (Each point can be used as either the input or output point.)	• PLC input/output: 8 points occupied (Each point can be used as either the input or output point.) • The length of the shortest pulse train output from the dedicated start terminal is 1 ms. • During positioning operation, the operation speed can be freely changed.

*1. The positioning range can be set in the range of -2,147,483,648 to +2,147,483,647 pulses.

*2. 200 points (table) can be set for the table type positioning operation.

3.1.3 Positioning Special Function Unit [FX2N-10GM, FX2N-20GM]

Model	FX2N-10GM	FX2N-20GM
Number of control axes	1 independent axis	2 independent/simultaneous axes
Interpolation	-	2-axes liner interpolation, circular interpolation
Pulse output system	Open collector system	Open collector system
Pulse output method	"Pulse train + direction" method "Forward/revers rotation pulse train" method	
Maximum frequency	200,000Hz	200,000Hz (100,000Hz during interpolation operation)
Acceleration/ deceleration type	Automatic trapezoidal acceleration/deceleration	
Unit	pulse,μm,10^{-4}inch,mdeg	
Positioning range	-999,999 to +999,999 pulse -999,999 to +999,999 mm -999,999 to +999,999 inch -999,999 to +999,999 deg	
Program language	Cod number system, table system	Cod number system
Position data	Block designation: 0 to 99 (100 blocks)*1	Block designation (X-axis, Y-axis, 2 axes simultaneously): 0 to 99 (100 blocks)
Connection of manual pulse generator	Connectable (Open collector system)	
Detection of absolute position (Reads out the current value of ABS.)	Set in parameter	
Others	• PLC input/output: 8 points occupied (Each point can be used as either the input or output point.) • Without main unit, this unit can perform individual operation. • This unit can perform teaching operation.	• PLC input/output: 8 points occupied (Each point can be used as either the input or output point.) • Without main unit, this unit can perform individual operation. • This unit can perform teaching operation. • I/O points can be added (48 points, maximum).

*1. Up to 100 points (table) can be set to perform the table type positioning operation.

3.2 Comparison of Operation Modes

Positioning operation pattern	Description	Built-in positioning function FX3UC PLC (main unit) FX3U-2HSY-ADP(FX3U)	FX2N-1PG (-E)	FX2N-10PG	FX2N-10GM	FX2N-20GM
Jogging operation 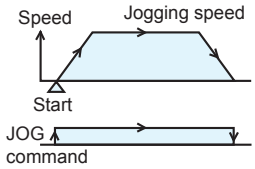	If forward/reverse rotation command is input, the motor will rotate in the forward/ reverse direction.	✓ Drive to Increment instruction is in substitution.	✓	✓	✓	✓
Mechanical zero return 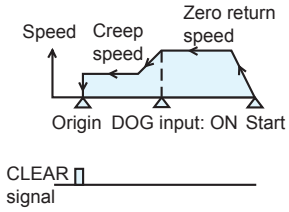	Mechanical zero return start command will start the zero return operation at the specified speed. At the completion of mechanical zero return, CLEAR signal will be output. DOG search function is adopted for each unit.	✓	✓	✓	✓	✓
Electric zero return 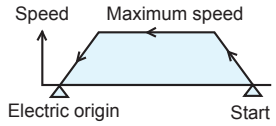	SETR instruction will return the workpiece to the set electric origin at the maximum speed set by parameters.	–	–	–	✓	✓
1-speed positioning 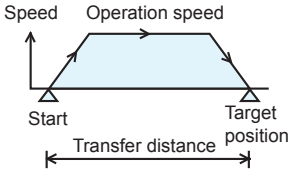	Start command will start operation at the specified operation speed, and the operation will be stopped at the target position.	✓ Drive to Increment/ Absolute instructions are in use.	✓	✓	✓	✓
2-speed positioning 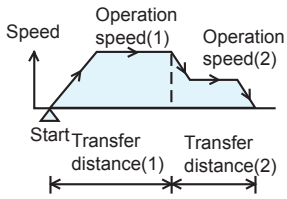	Start command will transfer the workpiece to the distance (1) at operation speed (1), and then to the distance (2) at operation speed (2).	–	✓	✓	✓ Pulse train function of direct connection instruction will perform this operation.	✓ Pulse train function of direct connection instruction will perform this operation. Operation of only one axis is possible.
Multi-speed operation 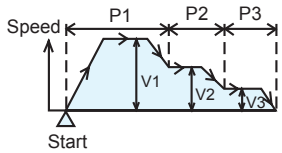	The workpiece will change the speed by the specified transfer distance. The left figure shows an example of 3-speed operation.	–	–	✓ The table operation (continuous operation) function will perform this operation.		

Positioning operation pattern	Description	Built-in positioning function FX3UC PLC (main unit) FX3U-2HSY-ADP(FX3U)	FX2N-1PG (-E)	FX2N-10PG	FX2N-10GM	FX2N-20GM
Stop with interruption 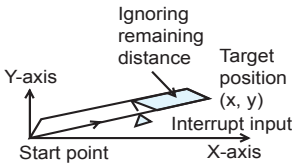 	During direct connection operation to the target position (x, y) at a vector speed, if interrupt input turns ON, the speed will be reduced, and then the positioning operation will be stopped.	–	–	–	–	✓
Stop with interruption 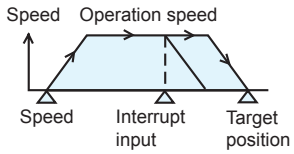 	Start command will start operation, and the operation will be stopped at the target position. During operation, if interrupt input turns ON, the speed will be reduced, and then the operation will be stopped.	–	–	✓	✓	–
1-speed positioning with interruption 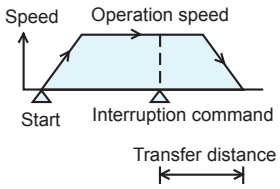 	If interrupt input turns ON, the workpiece will go the specified transfer distance at the same speed, the speed will be reduced, and then the operation will be stopped.	✓ Interrupt positioning instruction performs this operation.	✓	✓	✓	✓
2-speed positioning with speed reduction 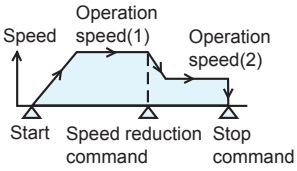 	The operation starts at operation speed (1) by start command. During operation, if the speed reduction command is input, the speed will be reduced to operation speed (2). After that, the operation will be continued at operation speed (2) until the stop command is input.	–	✓	–	–	–
2-speed positioning with interruption 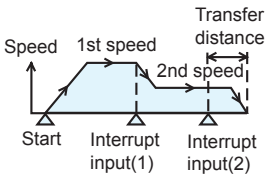 	If interrupt input(1) turns ON, the speed will be reduced to the 2nd speed. After that, if interrupt input(2) turns ON, the operation will be stopped after moving the specified transfer distance at the 2nd speed, but the speed will be reduced just before stop.	–	–	✓	✓	✓

Positioning operation pattern	Description	Built-in positioning function FX3UC PLC (main unit) FX3U-2HSY-ADP(FX3U)	FX2N-1PG (-E)	FX2N-10PG	FX2N-10GM	FX2N-20GM
Variable-speed operation 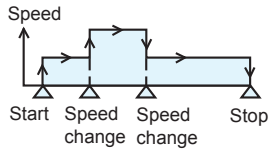 	Operation will be performed at the operation speed specified by PLC.	✓ Variable speed pulse output instruction will be input to perform this operation. Available at Ver.2.00 or later.	✓	✓ Operations with acceleration/ deceleration performs	–	–
Direct connection 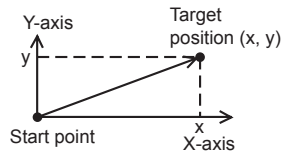 	The workpiece will go to the target position at the specified vector speed (interpolation operation).	–	–	–	–	✓ If interpolat-ion instructio-ns are consecut-ively set in the program, the next motion will be automati-cally started without stop of operation (pulse train function).
Circular interpolation 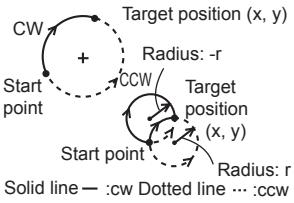 	The workpiece will go to the specified target position (x, y) along the arc at the specified circumferential speed. This operation performs by specifying center coordinate or radius.	–	–	–	–	
Table operation No. | Position | Speed | ••• 0 | 200 | 500 1 | 500 | 1000 2 | 1000 | 2000	The positioning control program can be set in the table.	–	–	✓ 200 points, maximum	✓ 100 points, maximum	–
Manual pulse generator operation 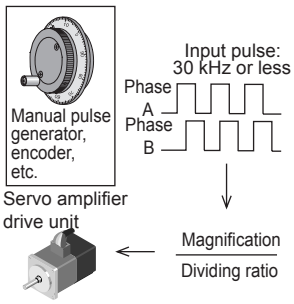 	Manual operation can be performed by manual pulse generator.	–	–	✓ 30 kHz, maximum	✓ 2 kHz, maximum	✓ 2 kHz, maximum

FX3U/FX3UC Series Programmable Controllers

User's Manual [Positioning Control Edition]
B. Built-in Positioning Function

Foreword

"B. Built-in Positioning Function" describes "positioning" function incorporated in the MELSEC-F FX3U/FX3UC Series PLC and should be read and understood before attempting to install or use the unit.
Also, store this manual in a safe place so that you can take it out and read it whenever necessary. Always forward it to the end user.

This manual confers no industrial property rights or any rights of any other kind, nor does it confer any patent licenses. Mitsubishi Electric Corporation cannot be held responsible for any problems involving industrial property rights which may occur as a result of using the contents noted in this manual.

© 2005 MITSUBISHI ELECTRIC CORPORATION

Description of Manual (Built-in Positioning Function)

In this manual, the following formats are used for description of the examples of connection:

Shows the title of the manual and the title of the division.
This area shows the title of the manual and the title of the division for the page currently opend.
1st line: Shows the title of the manual.
2nd line: Shows the title of the division.

Shows the title of the chapter and the title of the section.
This area shows the title of the chapter and the title of the section for the page currently opened.

Indexes the title of division.
The right side of each page indexes the title of the division for the page currently opened.

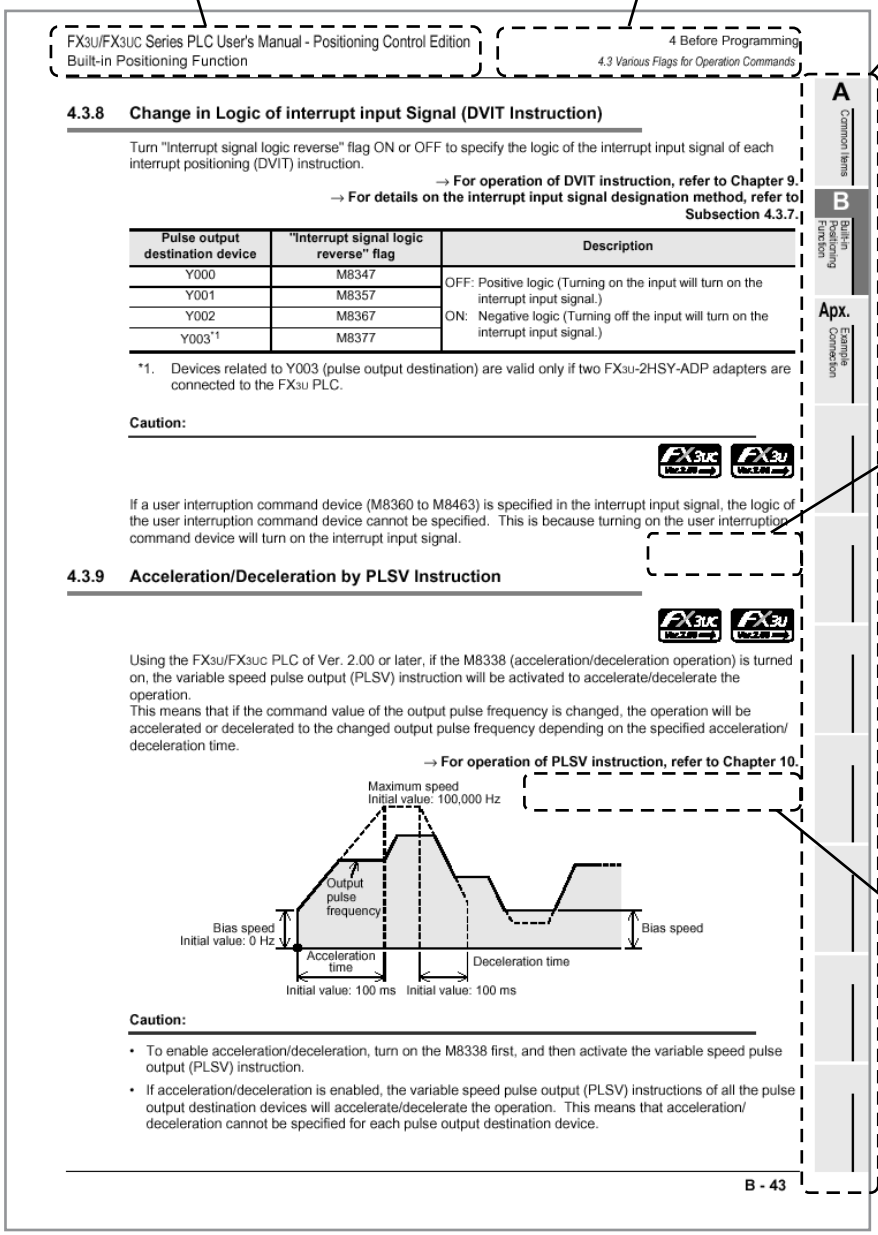

FX3U/FX3UC Series PLC User's Manual - Positioning Control Edition
Built-in Positioning Function

4 Before Programming
4.3 Various Flags for Operation Commands

A Common Items
B Built-in Positioning Function
Apx. Example Connection

4.3.8 Change in Logic of interrupt input Signal (DVIT Instruction)

Turn "Interrupt signal logic reverse" flag ON or OFF to specify the logic of the interrupt input signal of each interrupt positioning (DVIT) instruction.

→ For operation of DVIT instruction, refer to Chapter 9.
→ For details on the interrupt input signal designation method, refer to Subsection 4.3.7.

Pulse output destination device	"Interrupt signal logic reverse" flag	Description
Y000	M8347	OFF: Positive logic (Turning on the input will turn on the interrupt input signal.)
Y001	M8357	
Y002	M8367	ON: Negative logic (Turning off the input will turn on the interrupt input signal.)
Y003*1	M8377	

*1. Devices related to Y003 (pulse output destination) are valid only if two FX3U-2HSY-ADP adapters are connected to the FX3U PLC.

Caution:

If a user interruption command device (M8360 to M8463) is specified in the interrupt input signal, the logic of the user interruption command device cannot be specified. This is because turning on the user interruption command device will turn on the interrupt input signal.

4.3.9 Acceleration/Deceleration by PLSV Instruction

Using the FX3U/FX3UC PLC of Ver. 2.00 or later, if the M8338 (acceleration/deceleration operation) is turned on, the variable speed pulse output (PLSV) instruction will be activated to accelerate/decelerate the operation.
This means that if the command value of the output pulse frequency is changed, the operation will be accelerated or decelerated to the changed output pulse frequency depending on the specified acceleration/deceleration time.

→ For operation of PLSV instruction, refer to Chapter 10.

Caution:

- To enable acceleration/deceleration, turn on the M8338 first, and then activate the variable speed pulse output (PLSV) instruction.
- If acceleration/deceleration is enabled, the variable speed pulse output (PLSV) instructions of all the pulse output destination devices will accelerate/decelerate the operation. This means that acceleration/deceleration cannot be specified for each pulse output destination device.

B - 43

Shows the version number of the compatible PLC.

FX3UC Ver.2.00 → Compatible series

Shows the compatible version numbers.

- →Ver. 2.00: Version below 2.00
- Ver.2.00 →: Version 2.00 or later

Shows the reference.

This area shows the reference document (the reference document is shown next to "→ ").
• If the reference is in "A. Common items" division, the chapter, section, or subsection number will only be shown next to "→ ".
•If the reference is in another division, the chapter, section, or subsection number will be shown next to "→ " together with the title of the division.

1. Outline

This chapter describes the outline of positioning control. Note that the general outputs of the FX3UC PLC and FX3U-2HSY-ADP high-speed output special adapter are needed for positioning control.

1.1 Features

1) The general outputs of the FX3UC PLC can control up to 3 axes for the positioning operation.
2) If one high-speed output special adapter (FX3U-2HSY-ADP) is connected, the adapter can control up to 2 axes for the positioning operation. If two high-speed output special adapters are connected, the adapters can control up to 4 axes for the positioning operation.
3) The positioning instruction (applied instruction) of the FX3U/FX3UC PLC is used for positioning control.
4) The general outputs of the FX3UC PLC can output a pulse train of 100 kHz (open collector system).
5) FX3U-2HSY-ADP high-speed output special adapter can output a pulse train of 200 kHz (differential line driver system).
6) FX3U-2HSY-ADP high-speed output special adapter can switch the output method between "pulse train + direction" method and "forward/reverse rotation pulse train" method.

System

Points and references

- If the general outputs of the FX3UC PLC is used:

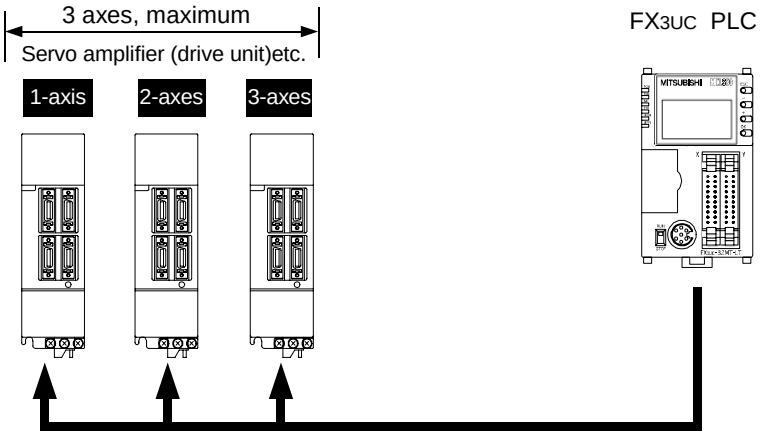

... Number of controllable axes

... To check the PLC model, refer to Section 1.3.

... For a detailed description of the positioning instruction, refer to Chapters 6 to 11.

... For a detailed description of the input/output specifications, refer to Section 2.4 and Section 2.5.

... For the examples of connection, refer to the Appendix.

- If FX3U-2HSY-ADP adapters are connected to the FX3U PLC:

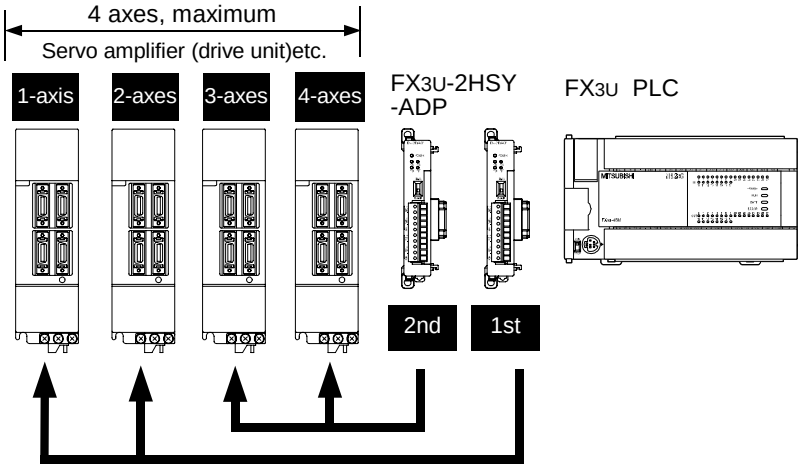

... Number of controllable axes

... To check the PLC model, refer to Section 1.3.

... For a detailed description of the positioning instruction, refer to Chapters 6 to 11.

... For a detailed description of the input/output specifications, refer to Section 2.4 and Section 2.5.

... For the examples of connection, refer to the Appendix.

1.2 Setup Procedure for Positioning Control

DESIGN PRECAUTIONS **DANGER**

- Provide a safety circuit on the outside of the PLC so that the whole system operates to ensure the safety even when external power supply trouble or PLC failure occurs.
  Otherwise, malfunctions or output failures may result in an accident.
  1) An emergency stop circuit, a protection circuit, an interlock circuit for opposite movements, such as normal and reverse rotations, and an interlock circuit for preventing damage to the machine at the upper and lower positioning limits should be configured on the outside of the PLC.
  2) When the PLC CPU detects an error, such as a watch dog timer error, during self-diagnosis, all outputs are turned off. When an error that cannot be detected by the PLC CPU occurs in an input/output control block, output control may be disabled.
     Design external circuits and mechanisms to ensure safe operations of the machine in such a case.
  3) When some sort of error occurs in a relay, triac or transistor of the output unit, output may be kept on or off.
     For output signals that may lead to serious accidents, design external circuits and mechanisms to ensure safe operations of the machine in such cases.

DESIGN PRECAUTIONS **CAUTION**

- Do not bundle the control line together with the main circuit or power line. Do not lay the control line near them.As a rule, lay the control line at least 100mm(3.94") or more away from the main circuit or power line.
  Noise may cause malfunctions.
- Install in a manner which prevents excessive force from being applied to the built-in connectors dedicated to programming, power connectors and I/O connectors.
  Failure to do so may result in wire breakage or failure of the PLC.

WIRING PRECAUTIONS **DANGER**

- Cut off all phases of the power source externally before installation or wiring work in order to avoid electric shock or damage of product.
- Make sure to attach the terminal cover offered as an accessory to the product before turning on the power or starting the operation after installation or wiring work.
  Failure to do so may cause electric shock.

WIRING PRECAUTIONS **CAUTION**

- Connect the AC power supply wiring to the dedicated terminals described in this manual.
  If an AC power supply is connected to a DC input/output terminal or DC power supply terminal, the PLC will be burnt out.
- Connect the DC power supply wiring to the dedicated terminals described in this manual.
  If an AC power supply is connected to a DC input/output terminal or DC power supply terminal, the PLC will be burnt out.
- Do not wire vacant terminals externally.
  Doing so may damage the product.
- Perform class D grounding (grounding resistance: 100Ω or less) to the grounding terminal in the FX3U Series main unit with a 2mm^2 or thicker wire.
  Do not connect the grounding terminal at the same point as a heavy electrical system (refer to the manual of the PLC main unit).
- Perform class D grounding (grounding resistance: 100Ω or less) to the grounding terminal in the FX3UC Series main unit with a wire as thick as possible.
  Do not connect the grounding terminal at the same point as a heavy electrical system (refer to the manual of the PLC main unit).
- When drilling screw holes or wiring, cutting chips or wire chips should not enter ventilation slits. such an accident may cause fire, failures or malfunctions.
- Use the product in such a status that excessive force is not applied on I/O connectors.
  Failure to do so may result in wire breakage or failure of the PLC.

WIRING PRECAUTIONS ⚠ **CAUTION**

- Fit the I/O cables securely to the designated connectors.
  Contact failures may cause malfunctions.
- Perform wiring properly to the FX3U Series main unit and FX0N/FX2N Series extension equipment of the terminal block type in accordance with the following precautions.
  Failure to do so may cause electric shock, short-circuit, wire breakage, or damages to the product.
  - The disposal size of the cable end should follow the dimensions described in this manual.
  - Tightening torque should be between 0.5 to 0.8 N•m.
- Observe the following items to wire the lines to the European terminal board. Ignorance of the following items may cause electric shock, short circuit, disconnection, or damage of the product.
  - The disposal size of the cable end should follow the dimensions described in this manual.
  - Tightening torque should be between 0.22 to 0.25 N•m.
  - Twist the end of strand wire and make sure there is no loose wires.
  - Do not solder-plate the electric wire ends.
  - Do not connect electric wires of unspecified size or beyond the specified number of electric wires.
  - Fix the electric wires so that the terminal block and connected parts of electric wires are not directly stressed.
- Properly perform wiring to the FX Series terminal blocks following the precautions below in order to prevent electrical shock, short-circuit, breakage of wire, or damage to the product:
  - The disposal size of the cable end should follow the dimensions described in this manual.
  - Tightening torque should be between 0.5 to 0.8 N•m.

STARTUP AND MAINTENANCE PRECAUTIONS ⚠ **DANGER**

- Do not touch any terminal while the PLC's power is on.
  Doing so may cause electrical shock or malfunctions.
- Before cleaning or retightening terminals, externally cut off all phases of the power supply.
  Failure to do so may expose you to shock hazard.
- Before modifying the program under operation or performing operation for forcible output, running or stopping, carefully read the manual, and sufficiently ensure the safety.
  An operation error may damage the machine or cause accidents.

STARTUP AND MAINTENANCE PRECAUTIONS ⚠ **CAUTION**

- Do not disassemble or modify the PLC.
  Doing so may cause failures, malfunctions or fire.
  For repair, contact your local Mitsubishi Electric distributor.
- Before connecting or disconnecting any extension cable, turn off power.
  Failure to do so may cause unit failure or malfunctions.
- Before attaching or detaching the following devices, turn off power.
  Failure to do so may cause device failure or malfunctions.
  - Peripheral devices, expansion boards and special adapters
  - I/O extension units/blocks and terminal blocks

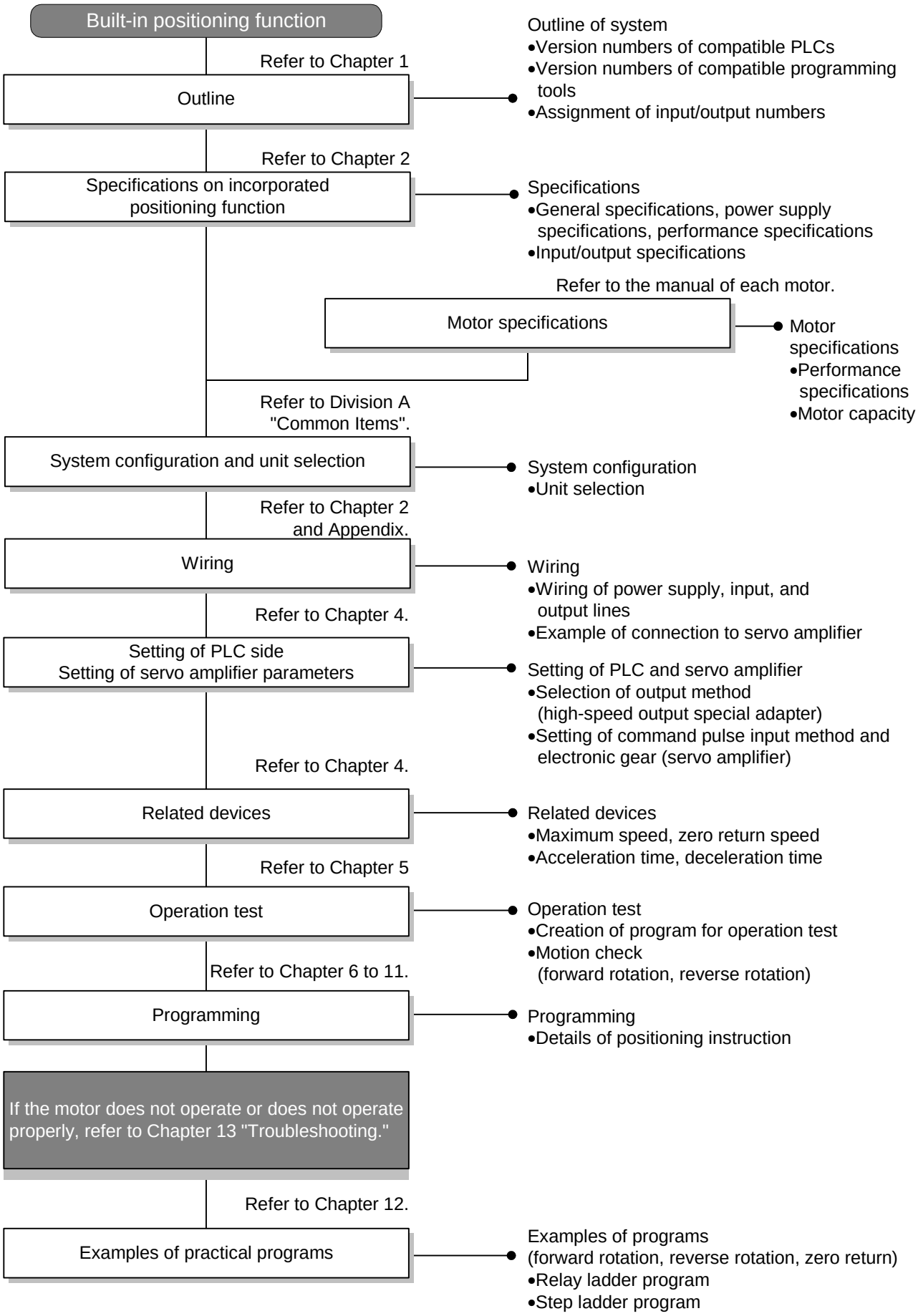
Built-in positioning function
Refer to Chapter 1
Outline
Outline of system
•Version numbers of compatible PLCs
•Version numbers of compatible programming tools
•Assignment of input/output numbers
Refer to Chapter 2
Specifications on incorporated positioning function
Specifications
•General specifications, power supply specifications, performance specifications
•Input/output specifications
Refer to the manual of each motor.
Motor specifications
Motor specifications
•Performance specifications
•Motor capacity
Refer to Division A "Common Items".
System configuration and unit selection
System configuration
•Unit selection
Refer to Chapter 2 and Appendix.
Wiring
Wiring
•Wiring of power supply, input, and output lines
•Example of connection to servo amplifier
Refer to Chapter 4.
Setting of PLC side
Setting of servo amplifier parameters
Setting of PLC and servo amplifier
•Selection of output method (high-speed output special adapter)
•Setting of command pulse input method and electronic gear (servo amplifier)
Refer to Chapter 4.
Related devices
Related devices
•Maximum speed, zero return speed
•Acceleration time, deceleration time
Refer to Chapter 5
Operation test
Operation test
•Creation of program for operation test
•Motion check (forward rotation, reverse rotation)
Refer to Chapter 6 to 11.
Programming
Programming
•Details of positioning instruction
If the motor does not operate or does not operate properly, refer to Chapter 13 "Troubleshooting."
Refer to Chapter 12.
Examples of practical programs
Examples of programs
(forward rotation, reverse rotation, zero return)
•Relay ladder program
•Step ladder program

1.3 Version Numbers of Compatible PLCs

The Built-in positioning function is compatible with the PLCs having the following version numbers.

Compatible PLC	Compatible version number	Date of production	Remarks
FX3U PLC	Ver. 2.20 (initial product) or later	After May 2005	Equivalent to FX3UC PLC Ver. 2.20 Functions specified as "Ver.2.00 or later" in this manual are applicable.
FX3UC PLC	Ver. 1.00 (initial product) or later	After January 2004	
	Ver. 1.30 or later	After August 2004	• DVIT instruction function is added. - Designation of interrupt input signal
	Ver. 2.20 or later	After May 2005	Functions specified as "Ver.2.00 or later" in this manual are applicable. • TBL instruction is added. - GX Developer can set the positions using parameters. • PLSV instruction function is added. - Acceleration/deceleration function • DVIT instruction function is added. - User interruption mode • DSZR, ZRN instruction function is added. - Designation of destination for CLEAR signal to be output

1. Version number check

Monitor the D8001 special data register to know the PLC version number.

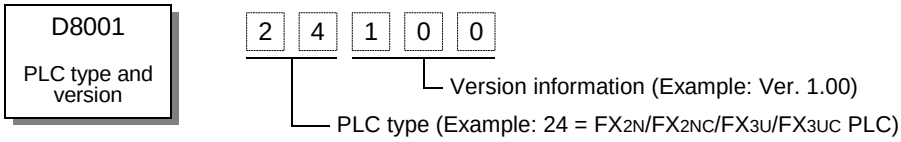

2. Description of production number

A label is affixed to the right side (viewed from the front) of the PLC. The serial number is written on this label. The control number included in the serial number shows the date of production.

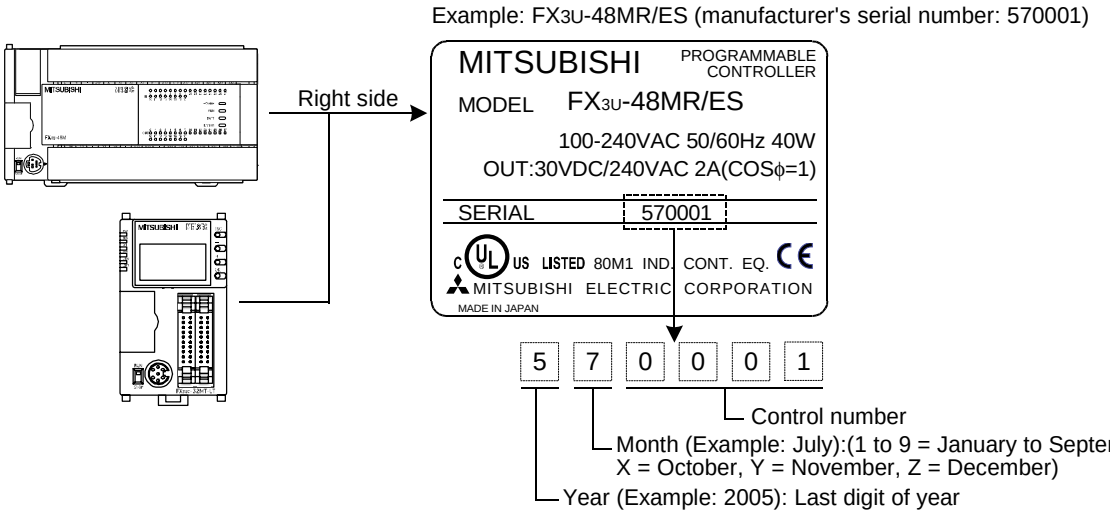

1.4 Version Numbers of Compatible Programming Tools

The Built-in positioning function depends on the version of the FX3U/FX3UC PLC. Select a PLC having optimum version number to create programs.

→ **For details on version numbers of compatible PLCs, refer to Section 1.3.**

1) FX3U PLC

Version number of FX3U PLC	Model (Software model)	Version number of compatible GX Developer	Remarks
Ver.2.00 or later	GX Developer SW□D5C-GPPW-J SW□D5C-GPPW-E	Ver. 8.23Z or later	• Supports FX3U PLCs (Ver.2.00 or later). Model selection: FX3U(C)*1

*1. Depending on the version of GX Developer, the model selection may be set to FX3UC.

2) FX3UC PLC

Version number of FX3UC PLC	Model (Software model)	Version number of compatible GX Developer	Remarks
Ver.1.00 or later	GX Developer SW□D5C-GPPW-J SW□D5C-GPPW-E	Ver.813P or later	• Supports FX3UC PLCs (Ver.1.00 or later). Model selection: FX3UC
Ver.1.30 or later		Ver.818U or later	• Supports FX3UC PLCs (Ver.1.30 or later). Model selection: FX3UC
Ver.2.00 or later		Ver.8.23Z or later	• Supports FX3UC PLCs (Ver.2.00 or later). Model selection: FX3U(C)*1

*1. Depending on the version of GX Developer, the model selection may be set to FX3UC.

1.5 Assignment of Input/Output Numbers

1.5.1 Assignment of Input Numbers

Assign the input numbers of the FX3U/FX3UC PLC as follows:

Application		Input number	Remarks
Stop command		All input points	Connect the line to any input. If the line-connected input is turned on, turn off the positioning instruction signal.
Zero return command		All input points	Connect the line to any input. If the line-connected input is turned on, turn on DSZR or ZRN instruction signal.
	Near-point signal (DOG)	All input points	Connect the line to the input of the near-point signal (DOG) specified by DSZR or ZRN instruction. → **For details on the near-point signal of DSZR instruction, refer to Section 6.2.** → **For details on the near-point signal of ZRN instruction, refer to Section 6.3.** **Point:** • To use DSZR instruction: If X000 to X017 of the main unit are set for the near-point signal (DOG), the near-point signal (DOG) will be monitored at 1ms intervals. • To use ZRN instruction: If X000 to X007 of the main unit are set for the near-point signal (DOG), the interruption function will be used for processing of the near-point signal (DOG).
	Zero-phase signal	X000 to 007	Connect the line to the input (X000 - X007) specified for the zero-phase signal (this input is specified by DSZR instruction).
ABS read		All input points	Connect the line if it is necessary to use the absolute position detection system. Connect the line to the input specified by the ABS instruction. Use 3 consecutive input points for this function.

<table>
<tr><th>Application</th><th>Input number</th><th>Remarks</th></tr>
<tr><td>JOG command</td><td>All input points</td><td>Connect the line to any input.
If the line-connected input is turned on, turn on DRVI instruction for the jogging motion.</td></tr>
<tr><td>Interrupt input</td><td>X000 to 007</td><td>The interrupt input depends on the pulse output destination specified by DVIT instruction as shown in the following table. If the version number of the PLC is above the following number, the interrupt input can be specified.
<table>
<tr><th>Pulse output destination</th><th>interrupt input</th></tr>
<tr><td>Y000</td><td>X000</td></tr>
<tr><td>Y001</td><td>X001</td></tr>
<tr><td>Y002</td><td>X002</td></tr>
<tr><td>Y003*1</td><td>X003</td></tr>
</table>
<table>
<tr><td>
FX3UC PLC Ver. 1.30 or later
If the interrupt input designation function is used, the D8386 register (interrupt input designation register) can specify the interrupt input number (X000 - X007) for each pulse output destination.
→ For details on the interrupt input designation method, refer to Subsection 4.3.7.
</td></tr>
<tr><td>
FX3U/FX3UC PLC*2 Ver. 2.00 or later:
If the interrupt input designation function is used, the D8386 register (interrupt input designation register) can specify the interrupt input number (X000 - X007) for each pulse output destination, or the User interrupt input command flag can be specified.
→ For details on the interrupt input designation method, refer to Subsection 4.3.7.
The User interrupt input command flag depends on the pulse output destination as shown in the following table.
<table>
<tr><th>Pulse output destination</th><th>User interrupt input command</th></tr>
<tr><td>Y000</td><td>M8460</td></tr>
<tr><td>Y001</td><td>M8461</td></tr>
<tr><td>Y002</td><td>M8462</td></tr>
<tr><td>Y003*1</td><td>M8463</td></tr>
</table>
</td></tr>
</table>
</td></tr>
<tr><td>Forward rotation limit (LSF)</td><td>All input points</td><td>Connect the line to any input.
If the line-connected input is turned on, turn on the forward limit flag.
The forward limit flag depends on the pulse output destination as shown in the following table.
<table>
<tr><th>Pulse output destination</th><th>Forward limit flag</th></tr>
<tr><td>Y000</td><td>M8343</td></tr>
<tr><td>Y001</td><td>M8353</td></tr>
<tr><td>Y002</td><td>M8363</td></tr>
<tr><td>Y003*1</td><td>M8373</td></tr>
</table>
</td></tr>
</table>

<table>
<tr><th>Application</th><th>Input number</th><th>Remarks</th></tr>
<tr><td>Reverse rotation limit (LSR)</td><td>All input points</td><td>Connect the line to any input.
If the line-connected input is turned on, turn on the reverse limit flag.
The reverse limit flag depends on the pulse output destination as shown in the following table:
<table>
<tr><th>Pulse output destination</th><th>Reverse limit flag</th></tr>
<tr><td>Y000</td><td>M8344</td></tr>
<tr><td>Y001</td><td>M8354</td></tr>
<tr><td>Y002</td><td>M8364</td></tr>
<tr><td>Y003*1</td><td>M8374</td></tr>
</table></td></tr>
</table>

*1. Y003 can be specified as the pulse output destination only if 2 high-speed output special adapters are connected to the FX3U PLC.

*2. Ver.2.20 is assigned to the initial product of the FX3U PLC.

1.5.2 Assignment of Output Numbers

1. FX3UC Series main unit (transistor output)

<table>
<tr><th>Application</th><th>Input number</th><th>Remarks</th></tr>
<tr><td>Pulse train signal (Pulse output destination)</td><td>Y000
Y001
Y002</td><td>Connect the line to the output (Y000 - Y002) specified for the pulse output designation (this output is specified by the positioning instruction).</td></tr>
<tr><td>Direction signal (Rotational direction signal)</td><td>All output points*1</td><td>Connect the line to any output.
Connect the line to the output specified for the rotation direction signal (this signal is specified by the positioning instruction).</td></tr>
<tr><td>CLEAR signal</td><td>All output points*1</td><td>Connect the line if it is necessary to use DSZR/ZRN instruction to output the CLEAR signal.
The CLEAR signal output depends on the pulse output destination specified by DSZR/ZRN instruction. If PLC version is later than the following number, the CLEAR signal can be specified.
<table>
<tr><th>Pulse output destination</th><th>CLEAR signal</th></tr>
<tr><td>Y000</td><td>Y004</td></tr>
<tr><td>Y001</td><td>Y005</td></tr>
<tr><td>Y002</td><td>Y006</td></tr>
</table>
<table>
<tr><td>FX3UC PLC Ver. 2.00 or later:
If the CLEAR signal designation function is used, the clear signal device specification register can specify an output for each pulse output destination.
→ For details on the CLEAR signal designation method, refer to Subsection 4.3.4.
The clear signal device specification register depends on the pulse output destination as shown in the following table:
<table>
<tr><th>Pulse output destination</th><th>Clear signal device specification register</th></tr>
<tr><td>Y000</td><td>D8464</td></tr>
<tr><td>Y001</td><td>D8465</td></tr>
<tr><td>Y002</td><td>D8466</td></tr>
</table></td></tr>
</table></td></tr>
</table>

*1. Specify the output number for transistor output.

2. High-speed output special adapter

Application	Terminal	Output number 1st	Output number 2nd	Remarks
Pulse train signal/forward rotation pulse train (pulse output destination)	Y0/2+ Y0/2-	Y000	Y002	Connect the line to determine the pulse train signal or the forward rotation pulse train for the 1st axis of each high-speed output special adapter. For the 1st adapter, specify Y000 as the pulse output destination of the positioning instruction. For the 2nd adapter, specify Y002 as the pulse output destination of the positioning instruction.
	Y1/3+ Y1/3-	Y001	Y003	Connect the line to determine the pulse train signal or the forward rotation pulse train for the 2nd axis of each high-speed output special adapter. For the 1st adapter, specify Y001 as the pulse output destination of the positioning instruction. For the 2nd adapter, specify Y003 as the pulse output destination of the positioning instruction.
Direction signal/reverse rotation pulse train (rotation direction signal)	Y4/6+ Y4/6-	Y004	Y006	Connect the line to determine the direction signal or the reverse rotation pulse train for the 1st axis of each high-speed output special adapter. For the 1st adapter, specify Y004 as the rotation direction signal of the positioning instruction. For the 2nd adapter, specify Y006 as the rotation direction signal output of the positioning instruction.
	Y5/7+ Y5/7-	Y005	Y007	Connect the line to determine the direction signal or the reverse rotation pulse train for the 2nd axis of each high-speed output special adapter. For the 1st adapter, specify Y005 as the rotation direction signal output of the positioning instruction. For the 2nd adapter, specify Y007 as the rotation direction signal output of the positioning instruction.
CLEAR signal	All output points *1			Connect the line if it is necessary to use DSZR/ZRN instruction to output the CLEAR signal. Using the CLEAR signal designation function, specify the output number for transistor output. In this case, do not specify a device if the device is already specified as the rotational direction signal output for a pulse output destination by the clear signal device specification register. → **For details on the CLEAR signal designation method, refer to Subsection 4.3.4.** The clear signal device specification register depends on the pulse output destination as shown in the following table: **Pulse output destination** / **Clear signal device specification register** Y000 / D8464 Y001 / D8465 Y002 / D8466 Y003 / D8467 Point: The CLEAR signal output initially set for DSZR/ZRN instruction is the same output as the direction signal (rotation direction signal, reversed pulse train). Be sure to specify the output number of the other transistor output using the CLEAR signal designation function.

*1. Specify the output number for transistor output.

1.5.3 Connection of High-Speed Output Special Adapter

1. **When FX3U-16MR/ES uses an instruction that needs the high-speed inputting operation, the main unit should have enough input terminals. Before selecting main unit, be sure to check the number of input points needed for operation.**

2. **Specify the rotational direction signal of the positioning instruction depending on the setting of each pulse output destination as shown in the following table:**

	Pulse output destination	Rotation direction signal
1st	Y000	Y004
	Y001	Y005
2nd	Y002	Y006
	Y003	Y007

3. **To output the CLEAR signal using DSZR/ZRN instruction**
   The CLEAR signal output initially set for DSZR/ZRN instruction is the same output as the direction signal/ reverse pulse train (rotation direction signal). Be sure to specify the output number of the other transistor output using the CLEAR signal designation function.
   → **For details on the CLEAR signal designation method, refer to Subsection 4.3.4.**

4. **If high-speed output special adapter is connected to the FX3U Series main unit, the output numbers will be assigned in the same way as the main unit.**
   If an output number assigned to high-speed output special adapter is turned on by the sequence program, the corresponding output of the main unit will also be turned on. Do not connect the line to both output terminals. Connect the line to one of the output terminals.
   The outputs of the high-speed output special adapter and the main unit will be turned on as shown in the following table:

Unit	Output operation		
	PLSY,PLSR,DSZR, DVIT,TBL,ZRN,PLSV,DRVI,DRVA instruction.	PWM instruction	Other instruction
FX3U Series main unit of relay output type	When those instructions in execution, assigned outputs turn ON (LED is ON)	Will be turned on and off. PWM (FNC 58) instruction, however, is not compatible with the relay output. For this reason, do not use this instruction. (Operation will not be performed properly due to delay in response output, chattering of the contact, aged contact, etc. For this reason, do not use this instruction.)	Will be turned on.
High-speed output special adapter	Will be turned on.	Will be turned on.	Will be turned on.

Block diagram

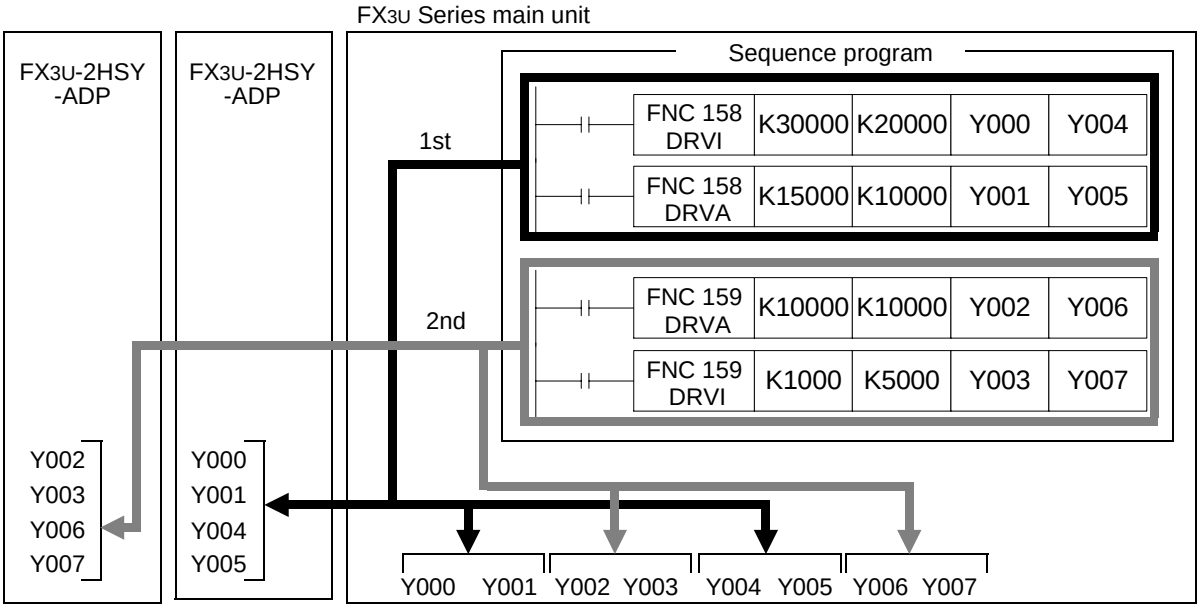

2. Specifications

DESIGN PRECAUTIONS **DANGER**

- Provide a safety circuit on the outside of the PLC so that the whole system operates to ensure the safety even when external power supply trouble or PLC failure occurs.
  Otherwise, malfunctions or output failures may result in an accident.
  1) An emergency stop circuit, a protection circuit, an interlock circuit for opposite movements, such as normal and reverse rotations, and an interlock circuit for preventing damage to the machine at the upper and lower positioning limits should be configured on the outside of the PLC.
  2) When the PLC CPU detects an error, such as a watch dog timer error, during self-diagnosis, all outputs are turned off. When an error that cannot be detected by the PLC CPU occurs in an input/output control block, output control may be disabled.
     Design external circuits and mechanisms to ensure safe operations of the machine in such a case.
  3) When some sort of error occurs in a relay, triac or transistor of the output unit, output may be kept on or off.
     For output signals that may lead to serious accidents, design external circuits and mechanisms to ensure safe operations of the machine in such cases.

DESIGN PRECAUTIONS **CAUTION**

- Do not bundle the control line together with the main circuit or power line. Do not lay the control line near them.As a rule, lay the control line at least 100mm(3.94") or more away from the main circuit or power line.
  Noise may cause malfunctions.
- Install in a manner which prevents excessive force from being applied to the built-in connectors dedicated to programming, power connectors and I/O connectors.
  Failure to do so may result in wire breakage or failure of the PLC.

DISPOSAL PRECAUTIONS **CAUTION**

- Please contact a company certified in the disposal of electronic waste for environmentally safe recycling and disposal of your device.

TRANSPORTATION PRECAUTIONS **CAUTION**

- Before transporting the PLC, turn on the PLC to check that the BATT LED lamp is off and check the battery life.
  If the PLC is transported with the BATT LED lamp on or the battery exhausted, the backed up data may be unstable during transportation.
- The PLC is precision equipment. During transportation, avoid impacts larger than that is specified in the manual of the PLC main unit. Failure to do so may cause failures in the PLC.
  After transportation, check the operations of the PLC.

2.1 General Specifications

For the general specifications on the FX3U/FX3UC PLC, refer to the following manuals. Note that the general specifications on the high-speed output special adapter are the same as the PLC excluding the specifications shown in the following table.

→ **For the general specifications on the FX3U PLC, refer to the FX3U Hardware Edition.**
→ **For the general specifications on the FX3UC PLC, refer to the FX3UC Hardware Edition.**

Item	Specifications	
Withstand voltage	500V AC, for 1 minute	In accordance with JEM-1021 Between output terminal of high-speed output special adapter and grounding terminal of PLC.
Insulation resistance	5M Ω or more using 500V DC insulation tester	

2.2 Power Supply Specifications

For the power supply specifications of the FX3U/FX3UC PLC, refer to the following manuals. The power supply specifications of the high-speed output special adapter are shown in the following table.

→ **For the power supply specifications on the FX3U PLC, refer to the FX3U Hardware Edition.**
→ **For the power supply specifications on the FX3UC PLC, refer to the FX3UC Hardware Edition.**

Item	Specifications
Output circuit drive power supply	24V DC, 60 mA The service power of the main unit will be supplied internally.
Adapter drive power supply	5V DC, 30 mA The adapter driver power will be internally supplied from the 5V DC power supply unit of the main unit.

2.3 Performance Specifications

Model	FX3UC PLC (main unit, transistor output)	FX3U-2HSY-ADP*1
Number of control axes	3 independent axes	2 independent axes
Interpolation	-	-
Pulse output system	Open collector system	Differential line driver system
Pulse output method	"Pulse train + direction" method	"Pulse train + direction" method "Forward/reverse rotation pulse train" method
Maximum frequency	100,000Hz	200,000Hz
Acceleration/ deceleration type	Automatic trapezoidal acceleration/deceleration	
Unit	pulse	
Positioning range	-999,999 to +999,999(pulse)	
Program language	Sequence program	
Position data	1 point (set in sequence program)	
Connection of manual pulse generator	-	-
Detection of absolute position (Reads out the current value of ABS.)	ABS instruction	
Others	• Pulses can be output from the general-purpose outputs (Y000, Y001, and Y002) of the main unit.	• Connect 2 adapters to the main unit to control 4 axes independently. • Connect this adapter to the main unit to use the differential line driver type pulse train. This is because the main unit cannot output this type of pulse train. • Use this adapter in place of the general-purpose outputs (Y000 - Y007)*2 of the main unit.

*1. Can only be connected to the FX3U PLC. Up to 2 adapters can be connected.

*2. If 2 adapters are connected, Y000 to Y007 will be used. If only one adapter is connected, Y000, Y001, Y004, and Y005 will be used. The relation between the output of FX3U-2HSY-ADP and the output of main unit is described in the following sections.

→ **To use high-speed output special adapters, refer to Subsection 1.5.3 and Section 4.9 of "B. Built-in Positioning Function".**

2.4 Input Specifications

2.4.1 FX3U Series main unit (24V DC Input)

This section describes the input specifications of the FX3U Series main unit. By the way, the simultaneous turning-on rate is restricted for the input extension units and the main unit. For details on this restriction, refer to the following manual:

→ **Refer to the FX3U Hardware Edition.**

Item		24V DC input specifications	
Input signal voltage		All inputs	24V DC±10%
Input impedance		X000 to X005	3.9kΩ
		X006,X007	3.3kΩ
		X010 or later	4.3kΩ
Input signal current		X000 to X005	6mA/24V DC
		X006,X007	7mA/24V DC
		X010 or later	5mA/24V DC
Input sensitivity current	Input ON current	X000 to X005	3.5 mA or more
		X006,X007	4.5mA or more
		X010 or later	3.5 mA or more
	Input OFF current	All inputs	1.5mA or less
Input response time		All inputs	Approx. 10 ms*1
Input signal type		All inputs	No-voltage contact input NPN/PNP open collector transistor
Circuit insulation		All inputs	Photo-coupler insulation
Indication of input motion		-	Turning on the input will light the LED indicator lamp.

*1. If inputs X000 to X007 are assigned to the zero-phase signal of DSZR instruction or the interrupt input of DVIT instruction, the input response time will be as shown in the following table.

Input	Input response time
X000 to X005	5µs
X006,X007	50µs

1. Internal input circuit

• Sink input line connection

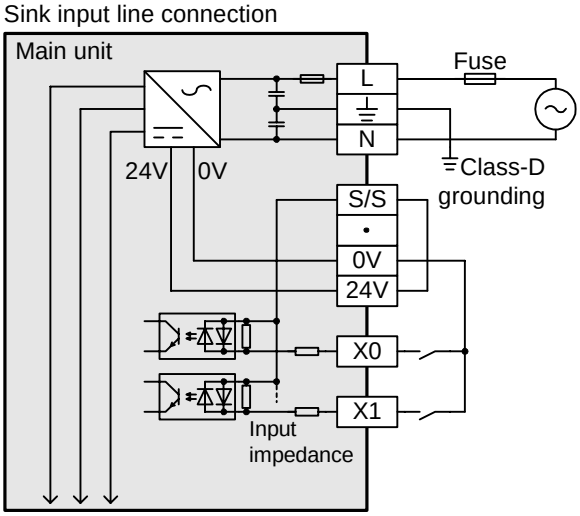

• Source input line connection

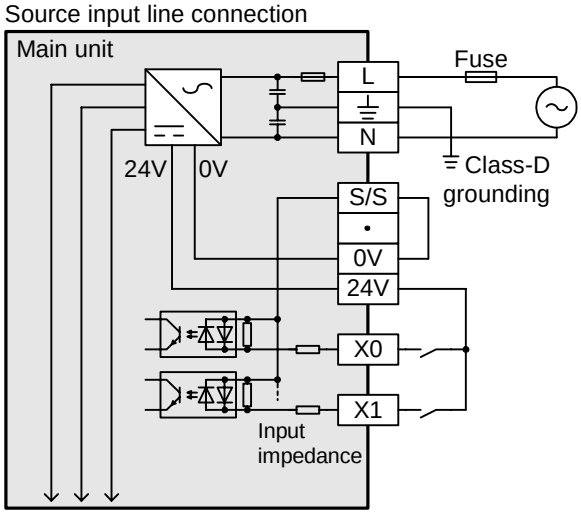

2.4.2 FX3UC Series main unit (24V DC Input)

This section describes the input specifications of the FX3UC Series main unit. Note that the simultaneous turning-on rate is restricted for the input extension units and the main unit. For details on this restriction, refer to the following manual:

→ **Refer to the FX3UC Hardware Edition.**

Item		24V DC input specifications	
Input signal voltage		All inputs	24V DC +20%, -15% / Ripple(p-p): 5 % or less
Input impedance		X000 to X005	3.9kΩ
		X006,X007	3.3kΩ
		X010 to X017	4.3kΩ
Input signal current		X000 to X005	6mA/24V DC
		X006,X007	7mA/24V DC
		X010 to X017	5mA/24V DC
Input sensitivity current	Input ON current	X000 to X005	3.5 mA or more
		X006,X007	4.5mA or more
		X010 to X017	3.5mA or more
	Input OFF current	All inputs	1.5mA or less
Input response time		All inputs	Approx. 10 ms*1
Input signal type		All inputs	No-voltage contact input NPN open collector transistor
Circuit insulation		All inputs	Photo-coupler insulation
Indication of input motion		-	Monitored using display module

*1. If inputs X000 to X007 are assigned to the zero-phase signal of DSZR instruction or the interrupt input of DVIT instruction, the input response time will be as shown in the following table.

Input	Input response time
X000 to X005	5µs
X006, X007	50µs

1. Internal input circuit

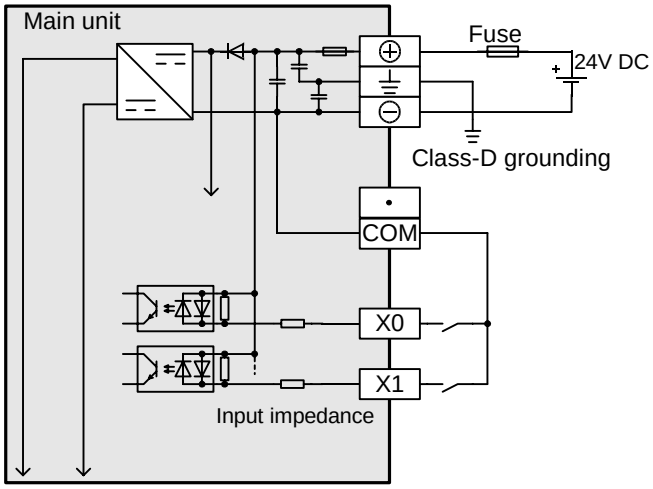

2.5 Output Specifications

2.5.1 FX3UC Series main unit (Transistor Output)

This section describes the transistor output specifications of the FX3UC Series main unit. Note that the simultaneous turning-on rate is restricted for the output extension units and the main unit. For details on this restriction, refer to the following manual:

→ **Refer to the FX3UC Hardware Edition.**

Item		Transistor output specifications		
External voltage		All outputs	5 to 30V DC	
Maximum load	Resistance load	Y000 to Y003	0.3 A/point	The total load current of the common items (16 points) should be 1.6 A or less.
		Y004 to Y017	0.1A/1point	
	Inductive load	Y000 to Y003	7.2W/1point (24V DC)	The total load of the common items (16 points) should be 38.4 W or less at 24V DC.
		Y004 to Y017	2.4W/1point (24V DC)	
Open-circuit leakage current		All outputs	0.1 mA or less at 30V DC	
ON voltage		All outputs	1.5V	
Response time	OFF→ON	Y000 to Y003	5 µs or less at 10 mA or more (5 to 24V DC)	
		Y004 to Y017	0.2 ms or less at 100 mA (at 24V DC)	
	ON→OFF	Y000 to Y003	5 µs or less at 10 mA or more (5 to 24V DC)	
		Y004 to Y017	0.2 ms or less at 100 mA (at 24V DC)	
Circuit insulation		All outputs	Photo-coupler insulation	
Indication of output motion		-	Monitored using display module	

Pulse output terminals Y000, Y001, and Y002 are high-speed response output terminals.
To use the positioning instruction, adjust the load current of the NPN open collector to 10 to 100 mA (5 to 24V DC).

Item	Description
Operation voltage range	5 to 24V DC
Operation current range	10mA to 100mA
Output frequency	100 kHz or less

1. Internal output circuit

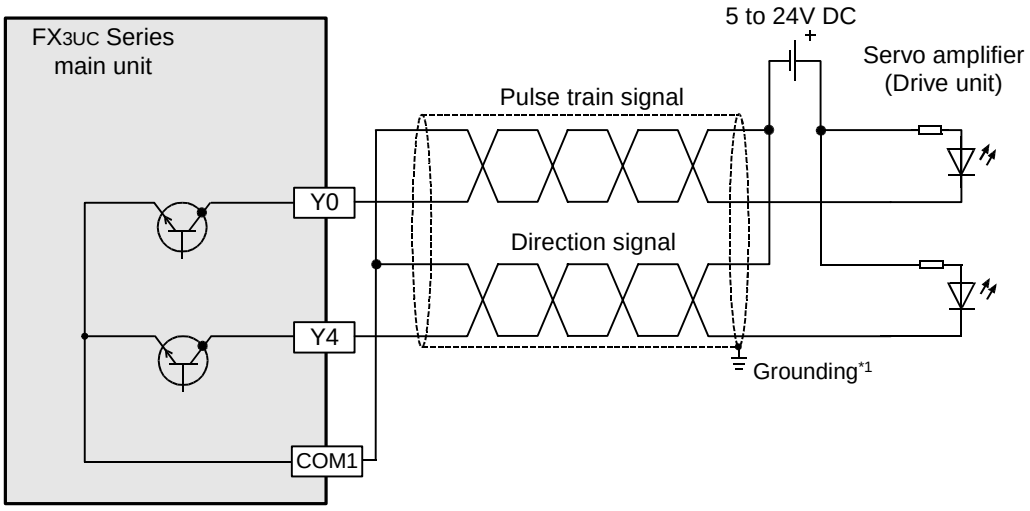

*1. To ground the unit, refer to the servo amplifier (drive unit) manual. If the grounding method is not specified, carry out class-D grounding.

2.5.2 High-Speed Output Special Adapter [FX3U-2HSY-ADP]

This section describes the output specifications of high-speed output special adapter (FX3U-2HSY-ADP).

Item	High-speed output special adapter (FX3U-2HSY-ADP)
Output system	Differential line driver system (equivalent to AM26C31)
Load current	25 mA or less
Maximum output frequency	200KHz
Insulation	Photo-coupler and transformer insulate PLC from external lines of its outputs, and transformer insulates each SG.
Cable length	10 m, maximum

1. Internal output circuit

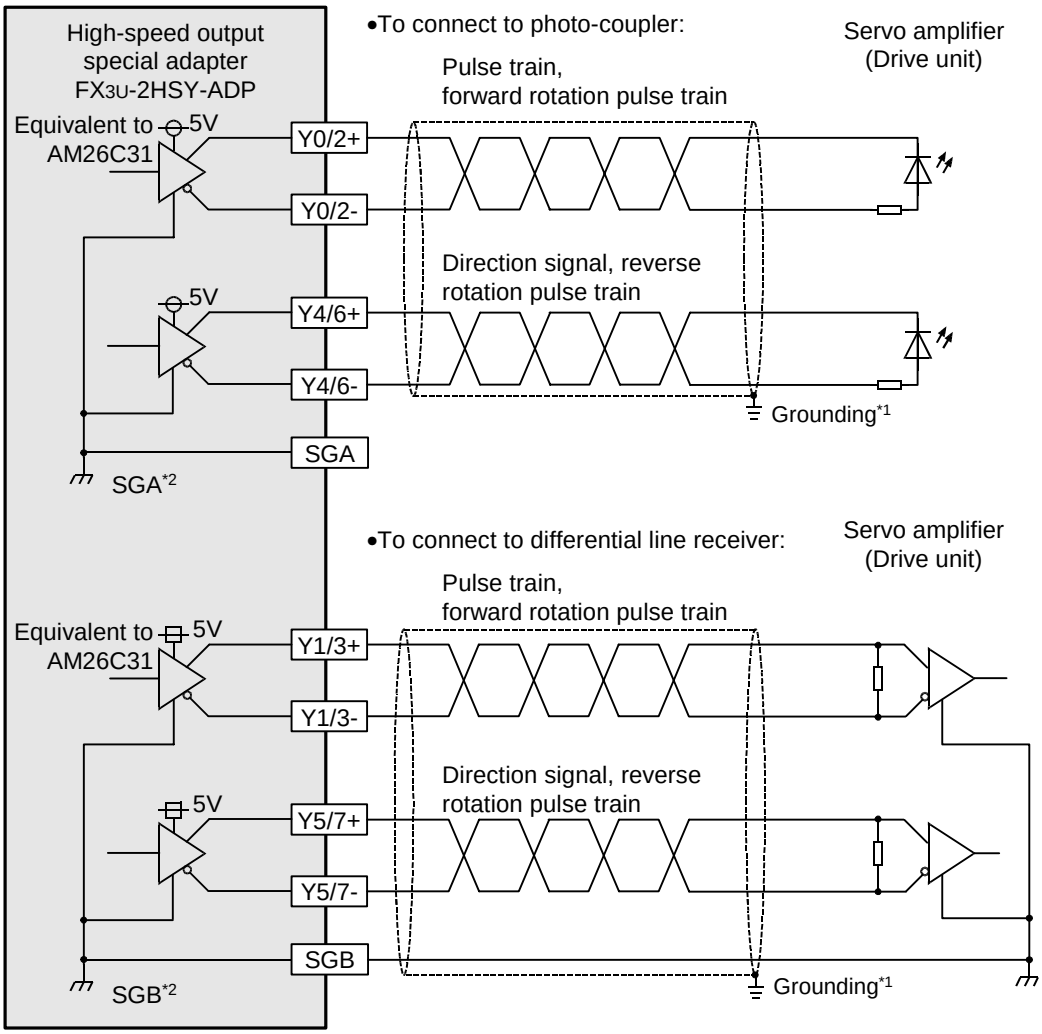

*1. To ground the unit, refer to the servo amplifier (drive unit) manual. If the grounding method is not specified, carry out class-D grounding.

*2. The line between the SGA and the SGB is insulated.

2.6 List of Functions

The instructions needed for the positioning function Built-in in the FX3U/FX3UC PLC are shown in the following table:

Positioning instruction		Operation	Description	Refer to
Mechanical zero return				
DSZR instruction	zero return with DOG search function	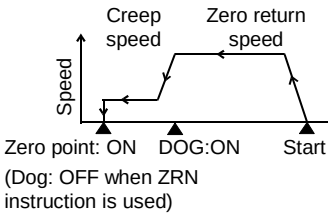	If DSZR/ZRN instruction turns ON, mechanical zero return will be started at the specified zero return speed. If the dog sensor is turned on, the speed will be reduced to the creep speed. If the zero-phase signal is input, the operation will be stopped, and the zero return will be completed. (If ZRN instruction is used, the dog sensor will be turned off to stop the operation.	Chapter 6.
ZRN instruction	zero return			
Absolute position detection system				
ABS instruction	Absolute value detec-tion system (Reading of current ABS value)	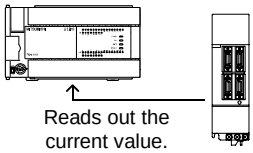	If ABS instruction turns ON, the current motor address will be read out from the servo amplifier.	Chapter 7.
1-speed positioning				
DRVI instruction	Relative positioning	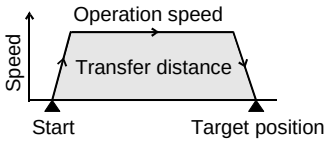	If DRVI/DRVA instruction turns ON, the operation will be started at the operation speed. If the workpiece comes to the target position, the operation will be stopped.	Chapter 8.
DRVA instruction	Absolute positioning			
1-speed positioning with interruption				
DVIT instruction	Interruption positioning	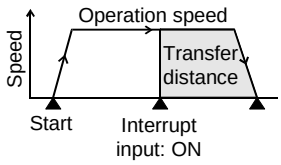	If DVIT instruction turns ON, the operation will be started at the operation speed. If interrupt input turns ON, the workpiece will go the specified transfer distance, but just before stop, the speed will be reduced.	Chapter 9.
Variable speed operation				
PLSV instruction	Variable positioning (Variable Speed Pulse Output)	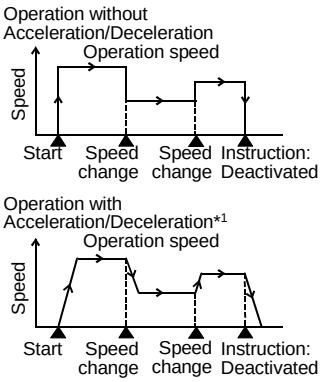	If PLSV instruction turns ON, the operation will be started at the specified operation speed. If the operation speed varies, the speed will accelerate/decelerate, and the operation will be continued at the varied speed. If PLSV instruction is deactivated, the speed will decelerate, and then the operation will stop.	Chapter 10.
Others				
TBL instruction *1	Positioning using batch setting method	No. / Position / Speed / Instruction 1 / 1000 / 2000 / DRVI 2 / 20000 / 5000 / DRVA 3 / 50 / 1000 / DVIT 4 / 800 / 10000 / DRVA ⋮	Preliminarily set the positioning point by parameters. If TBL instruction turns ON, the workpiece will be transferred to the specified point.	Chapter 11.

*1. This instruction is compatible with Ver.2.00 or later.

3. Connection of Input/Output Lines and Tightening Torques

This chapter describes how to connect the input/output lines and the terminal tightening torques.

WIRING PRECAUTIONS **DANGER**

- Cut off all phases of the power source externally before installation or wiring work in order to avoid electric shock or damage of product.
- Make sure to attach the terminal cover offered as an accessory to the product before turning on the power or starting the operation after installation or wiring work.
  Failure to do so may cause electric shock.

WIRING PRECAUTIONS **CAUTION**

- Connect the AC power supply wiring to the dedicated terminals described in this manual.
  If an AC power supply is connected to a DC input/output terminal or DC power supply terminal, the PLC will be burnt out.
- Connect the DC power supply wiring to the dedicated terminals described in this manual.
  If an AC power supply is connected to a DC input/output terminal or DC power supply terminal, the PLC will be burnt out.
- Do not wire vacant terminals externally.
  Doing so may damage the product.
- Perform class D grounding (grounding resistance: 100Ω or less) to the grounding terminal in the FX3U Series main unit with a 2mm2 or thicker wire.
  Do not connect the grounding terminal at the same point as a heavy electrical system (refer to the manual of the PLC main unit).
- Perform class D grounding (grounding resistance: 100Ω or less) to the grounding terminal in the FX3UC Series main unit with a wire as thick as possible.
  Do not connect the grounding terminal at the same point as a heavy electrical system (refer to the manual of the PLC main unit).
- When drilling screw holes or wiring, cutting chips or wire chips should not enter ventilation slits. such an accident may cause fire, failures or malfunctions.
- Use the product in such a status that excessive force is not applied on I/O connectors.
  Failure to do so may result in wire breakage or failure of the PLC.
- Fit the I/O cables securely to the designated connectors.
  Contact failures may cause malfunctions.
- Perform wiring properly to the FX3U Series main unit and FX0N/FX2N Series extension equipment of the terminal block type in accordance with the following precautions.
  Failure to do so may cause electric shock, short-circuit, wire breakage, or damages to the product.
  - The disposal size of the cable end should follow the dimensions described in this manual.
  - Tightening torque should be between 0.5 to 0.8 N•m.
- Observe the following items to wire the lines to the European terminal board. Ignorance of the following items may cause electric shock, short circuit, disconnection, or damage of the product.
  - The disposal size of the cable end should follow the dimensions described in this manual.
  - Tightening torque should be between 0.22 to 0.25 N•m.
  - Twist the end of strand wire and make sure there is no loose wires.
  - Do not solder-plate the electric wire ends.
  - Do not connect electric wires of unspecified size or beyond the specified number of electric wires.
  - Fix the electric wires so that the terminal block and connected parts of electric wires are not directly stressed.
- Properly perform wiring to the FX Series terminal blocks following the precautions below in order to prevent electrical shock, short-circuit, breakage of wire, or damage to the product:
  - The disposal size of the cable end should follow the dimensions described in this manual.
  - Tightening torque should be between 0.5 to 0.8 N•m.

3.1 Terminal Board (M3, M3.5)

A terminal board is adopted for the FX3U Series main unit, FX2N Series input/output extension unit (excluding some types), and FX0N Series input/output extension block.

3.1.1 Terminal Screw Size

The terminal screw size of each product is shown in the following table. For details on the crimp-style terminals, refer to Subsection 3.1.2.

Product	Terminal screw	Tightening torque
FX3U Series main unit, FX2N Series input/output powered extension unit, FX2N/FX0N Series input/output extension block	M3	0.5 to 0.8N•m
FX Series terminal block	M3.5	

3.1.2 Termination

The size of each crimp-style terminal depends on the size of the terminal screw and the wiring method. Refer to the following description to select a crimp-style terminal of optimum size.

1. FX3U Series main unit, FX2N Series input/output powered extension unit, and FX0N Series input/output extension block

- When one wire is connected to one terminal

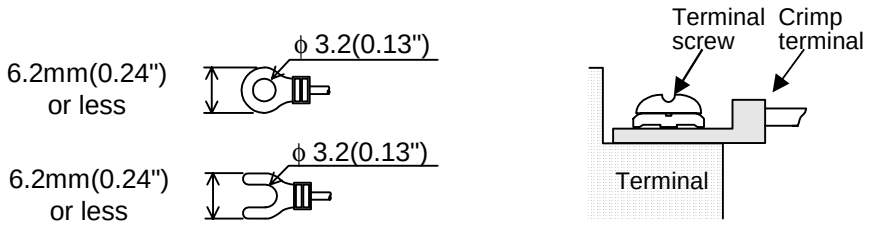

- When two wires are connected to one terminal

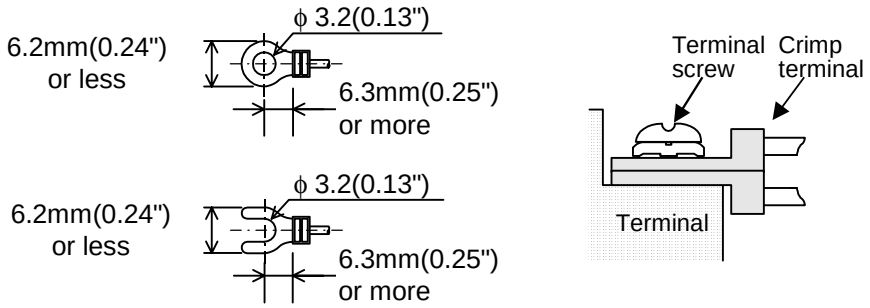

2. FX Series terminal block

- When one wire is connected to one terminal

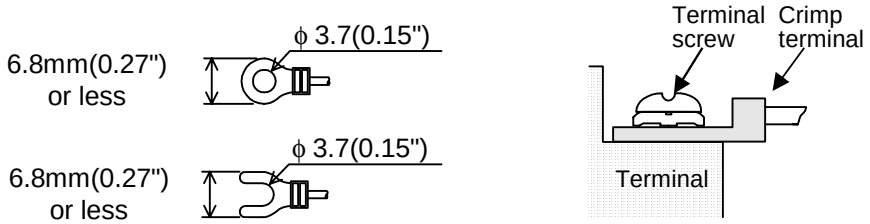

- When two wires are connected to one terminal

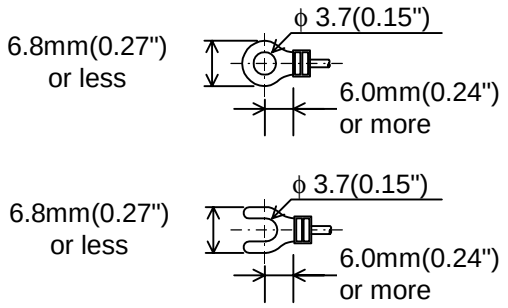

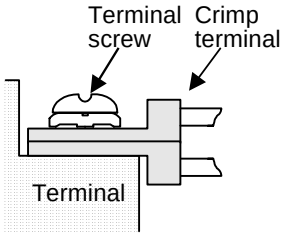

3.2 European Terminal Board

The European terminal board is adopted for the high-speed output special adapter and the FX2NC Series input/output extension block.

3.2.1 Cable

Applicable cables and tightening torques

	Wire size (stranded/single wire)	Tightening torque	Termination
Single-wire	0.3 mm^2 to 0.5 mm^2(AWG22 to 20)	0.22 to 0.25 N•m	• To connect a stranded cable, peel the sheath off the cable, and then twist the core before connection. • To connect a single-wire cable, just peel the sheath off the cable before connection.
2-wires	0.3 mm^2(AWG22)		
Rod terminal with insulation sleeve	0.3 mm^2 to 0.5 mm^2 (AWG22-20) (Refer to the external view of rod terminal shown in the following figure.)		• Rod terminal with insulation sleeve (recommended terminal):AI 0.5-8WH (Manufactured by Phoenix Contact) • Caulking tool: CRIMPFOX UD6 (Manufactured by Phoenix Contact)

3.2.2 Termination of Cable End

Directly terminate the end of each stranded cable or single-wire cable without a tool, or use the rod terminal with insulation sleeve for termination.

- Directly terminate end of stranded/single-wire cable:
  - Terminate the end of the stranded cable so that "barbed wires" cannot protrude.
  - Do not solder-plate the end of the cable.

- Terminate cable end using rod terminal with insulation sleeve:
  If the cable sheath is too thick, it may be difficult to insert the cable into the insulation sleeve. For this reason, select an appropriate cable while referring to the external view.

Manufacturer	Model	Caulking tool
Phoenix Contact	AI 0.5-8WH	CRIMPFOX UD6

• Stranded wire/solid wire

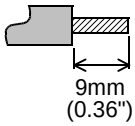

• Bar terminal with insulating sleeve

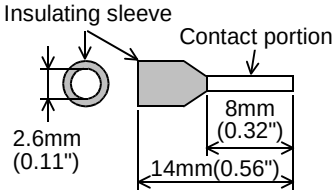

3.2.3 Tool

- To tighten terminals, use a purchased small-sized screwdriver whose tip is straight and is not widened as shown in the right figure.

Manufacturer	Model
Phoenix Contact	SZS 0.4×2.5

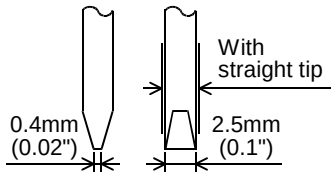

3.3 Connector

Connectors conforming to the requirements of the MIL C-83503 are adopted for the FX3UC Series main unit and some types of FX2NC Series input/output extension blocks.

3.3.1 Cable Connection To Input/Output Connector

Prepare the input/output cables while referring to the next page.

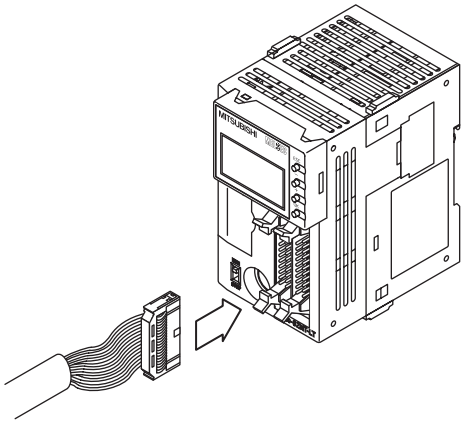

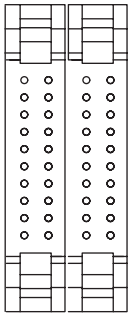

Input		Output	
X0	X10	Y0	Y10
X1	X11	Y1	Y11
X2	X12	Y2	Y12
X3	X13	Y3	Y13
X4	X14	Y4	Y14
X5	X15	Y5	Y15
X6	X16	Y6	Y16
X7	X17	Y7	Y17
COM	COM	COM1	COM1
● *1	● *1	● *1	● *1

*1: "●" means that the terminal is not used.

3.3.2 Setup of Input/Output Connection Connector

1. **Applicable connector (connector purchased at store)**
   Use a 20-pin (1-key) socket that conforms to the requirements of the MIL C-83503.
   Preliminarily check that the peripheral parts, such as the connector cover, will not cause any interference.

2. **Input/output cables (optional cables manufactured by our company)**
   Our company can provide input/output cables already equipped with a connector.

Model	Length	Description	Connector type
FX-16E-500CAB-S	5m (16' 4")	General-purpose input/output cable	The 20-pin connector is attached to one end of the non-stranded cable. (Green, red)
FX-16E-150CAB	1.5m (4'11")	Cable for connection of FX Series terminal block to input/output connector For details of connection to the FX Series terminal block, refer to the following manuals: →**FX3U Hardware Edition** →**FX3UC Hardware Edition**	The 20-pin connector is attached to both end of the flat cable (with tube).
FX-16E-300CAB	3m (9'10")		
FX-16E-500CAB	5m (16' 4")		
FX-16E-150CAB-R	1.5m (4'11")		The 20-pin connector is attached to both ends of the round multi-core cable.
FX-16E-300CAB-R	3m (9'10")		
FX-16E-500CAB-R	5m (16' 4")		
FX-A32E-150CAB	1.5m (4'11")	Cable for connection of A Series A6TBXY36 connector/terminal board conversion unit to input/output connector type	Two 20-pin connectors (unit: 16 points) are attached to the PLC side of the flat cable (with tube), and the dedicated connector is attached to the terminal board side of the flat cable. (32 points for each input/output common)
FX-A32E-300CAB	3m (9'10")		
FX-A32E-500CAB	5m (16' 4")		

3. Input/output cable connectors prepared by purchaser (optional connectors manufactured by our company)

The purchaser should prepare the cables and press-fitting tools.

Input/output connector model and number of connectors included in one set			Applicable cable (recommended cable: UL-1061) and tool	
Our model		Description of parts (Manufactured by Daiichi Denshi Kogyo Co., Ltd.)	Cable size	Crimping tool (Manufactured by Daiichi Denshi Kogyo Co., Ltd.)
FX2C-I/O-CON,for flat cable	Set of 10 parts	Crimp-style connector FRC2-A020-30S	AWG28(0.1 mm^2) 1.27 pitch, 20 cores	357J-4674D main unit 357J-4664N attachment
FX2C-I/O-CON-S, for non-stranded cable	5 sets	Housing HU-200S2-001 Crimp-style contact HU-411S	AWG22(0.3mm^2)	357J-5538
FX2C-I/O-CON-SA, for non-stranded cable	5 sets	Housing HU-200S2-001 Crimp-style contact HU-411SA	AWG20(0.5mm^2)	357J-13963

4. Connector already confirmed as applicable (sold at store)

Connectors manufactured by Daiichi Denshi Kogyo Co., Ltd. (shown in 3) and connectors manufactured by Matsushita Electric Works, Ltd. (shown in following table)

Connector model		Applicable cable (recommended cable: UL-1061)	Crimping tool
Housing	AXW1204A	AWG22(0.3mm^2) AWG24(0.2mm^2)	AXY52000
Contact	AXW7221		
Semi-cover	AXW62001A		

4. Before Programming

This chapter describes several items that should be known before programming. They are:

- Operation of related devices, such as output pulse frequency, operation command flag, current value, and operation monitor flag.
- Items to be set on PLC side
- Items to be set on servo amplifier (drive unit) side
- Items to be observed in programming

4.1 List of Related Devices

→ **For details on related devices, refer to Section 4.2 to Section 4.4.**

4.1.1 Special Auxiliary Relays

The following table shows the related special auxiliary relays. Note that Y000, Y001, Y002, and Y003 are devices that determine the pulse output destinations.

→ **For details on PLSY (FNC 57), PWM (FNC 58), and PLSR (FNC 59) instructions, refer to the programming manual.**

Device number				Function	Attribute	Corresponding instructions	Refer to
Y000	Y001	Y002	Y003*1				
M8029				"Instruction execution complete" flag	Read only	PLSY,PLSR,DSZR, DVIT,ZRN,PLSV, DRVI,DRVA and so on.	Subsection 4.4.2
M8329				"Instruction execution abnormal end" flag	Read only	PLSY,PLSR,DSZR, DVIT,ZRN,PLSV, DRVI,DRVA	Subsection 4.4.2
M8338*2				Acceleration/deceleration Operation.*3	Drivable	PLSV	Subsection 4.3.9
M8336*4				Interrupt input specification function enabled*3	Drivable	DVIT	Subsection 4.3.7
M8340	M8350	M8360	M8370	"Pulse output monitor" flag. (BUSY/READY)	Read only	PLSY,PLSR,DSZR, DVIT,ZRN,PLSV, DRVI,DRVA	Subsection 4.4.3
M8341	M8351	M8361	M8371	Clear signal OUTPUT function enable.*3	Drivable	DSZR,ZRN	Subsection 4.3.4
M8342	M8352	M8362	M8372	Zero return direction specification.*3	Drivable	DSZR	Subsection 4.3.3
M8343	M8353	M8363	M8373	Forward limit	Drivable	PLSY,PLSR,DSZR, DVIT,ZRN,PLSV, DRVI,DRVA	Subsection 4.3.1
M8344	M8354	M8364	M8374	Reverse limit	Drivable		Subsection 4.3.1
M8345	M8355	M8365	M8375	DOG signal logic reverse*3	Drivable	DSZR	Subsection 4.3.5
M8346	M8356	M8366	M8376	Zero point signal logic reverse*3	Drivable	DSZR	Subsection 4.3.6
M8347	M8357	M8367	M8377	Interrupt signal logic reverse*3,*5	Drivable	DVIT	Subsection 4.3.8

*1. Devices related to Y003 (pulse output destination) are valid only if two FX3U-2HSY-ADP adapters are connected to the FX3U PLC.
*2. This function will be valid if Ver. 2.00 or later is used.
*3. Cleared when PLC switches from RUN to STOP
*4. This function will be valid if Ver. 1.30 or later is used.
*5. For the user interrupt input command devices, the logical NOT function will not be activated.

Device number				Function	Attribute	Corresponding instructions	Refer to
Y000	Y001	Y002	Y003*1				
M8348	M8358	M8368	M8378	Positioning instruction activation	Read only	PLSY,PWM,PLSR, DSZR,DVIT,ZRN, PLSV,DRVI,DRVA	Subsection 4.4.4
M8349	M8359	M8369	M8379	Pulse output stop command.*3	Drivable	PLSY,PLSR,DSZR, DVIT,ZRN,PLSV, DRVI,DRVA	Subsection 4.3.2
M8460*2	M8461*2	M8462*2	M8463*2	User interrupt input command.*3	Drivable	DVIT	Subsection 4.3.7
M8464*2	M8465*2	M8466*2	M8467*2	Clear signal device specification function enabled.*3	Drivable	DSZR,ZRN	Subsection 4.3.4

*1. Devices related to Y003 (pulse output destination) are valid only if two FX3U-2HSY-ADP adapters are connected to the FX3U PLC.
*2. This function will be valid if Ver. 2.00 or later is used.
*3. Cleared when PLC switches from RUN to STOP
*4. This function will be valid if Ver. 1.30 or later is used.
*5. For the user interrupt input command devices, the logical NOT function will not be activated.

4.1.2 Special Data Registers

The following table shows the related special data registers. Note that Y000, Y001, Y002, and Y003 are devices that determine the pulse output destinations.

Device number								Function	Data length	Initial value	Corresponding instructions	Refer to
Y000		Y001		Y002		Y003*1						
D8336*2								interrupt input designation	16-bit	-	DVIT	Subsection 4.3.7
D8340	Low-order	D8350	Low-order	D8360	Low-order	D8370	Low-order	Current value register [PLS]	32-bit	0	DSZR,DVIT, ZRN,PLSV, DRVI,DRVA	Subsection 4.4.1
D8341	High-order	D8351	High-order	D8361	High-order	D8371	High-order					
D8342		D8352		D8362		D8372		Bias speed [Hz]	16-bit	0	DSZR,DVIT, ZRN,PLSV, DRVI,DRVA	Subsection 4.2.6
D8343	Low-order	D8353	Low-order	D8363	Low-order	D8373	Low-order	Maximum speed [Hz]	32-bit	100,000	DSZR,DVIT, ZRN,PLSV, DRVI,DRVA	Subsection 4.2.5
D8344	High-order	D8354	High-order	D8364	High-order	D8374	High-order					
D8345		D8355		D8365		D8375		Creep speed [Hz]	16-bit	1000	DSZR	Subsection 4.2.4
D8346	Low-order	D8356	Low-order	D8366	Low-order	D8376	Low-order	Zero return speed [Hz]	32-bit	50,000	DSZR	Subsection 4.2.3
D8347	High-order	D8357	High-order	D8367	High-order	D8377	High-order					
D8348		D8358		D8368		D8378		Acceleration time [ms]	16-bit	100	DSZR,DVIT, ZRN,PLSV*3, DRVI,DRVA	Subsection 4.2.7
D8349		D8359		D8369		D8379		Deceleration time [ms]	16-bit	100	DSZR,DVIT, ZRN,PLSV*3, DRVI,DRVA	Subsection 4.2.8
D8464*4		D8465*4		D8466*4		D8467*4		Clear signal device specification	16-bit	-	DSZR,ZRN	Subsection 4.3.4

*1. Devices related to Y003 (pulse output destination) are valid only if two FX3U-2HSY-ADP adapters are connected to the FX3U PLC.
*2. This function will be valid if Ver. 1.30 or later is used.
However, the user interruption command device can be specified only if Ver. 2.00 or later is used.
*3. This instruction will be valid during acceleration/deceleration using Ver. 2.00 or later only.
*4. This function will be valid if Ver. 2.00 or later is used.

4.2 Setting of Various Items Regarding Speeds

Specify the output pulse frequency using the operand of each instruction or the related device to determine the output pulse frequency, zero return speed, or creep speed.

4.2.1 Setting of Various Items Regarding Instructions and Speeds

1. Interrupt Positioning (DVIT) instruction, drive to increment (DRVI) instruction, and drive to absolute (DRVA) instruction

For these instructions, it is necessary to specify the maximum speed, bias speed, acceleration time, and deceleration time using the related devices in addition to the output pulse frequency specified by the operand of the instruction.

→ **For operation of DVIT instruction, refer to Chapter 9.**
→ **For operation of DRVI or DRVA instruction, refer to Chapter 8.**
→ **For details on each setting item, refer to Subsection 4.2.2 , and Subsection 4.2.5 to Subsection 4.2.8**

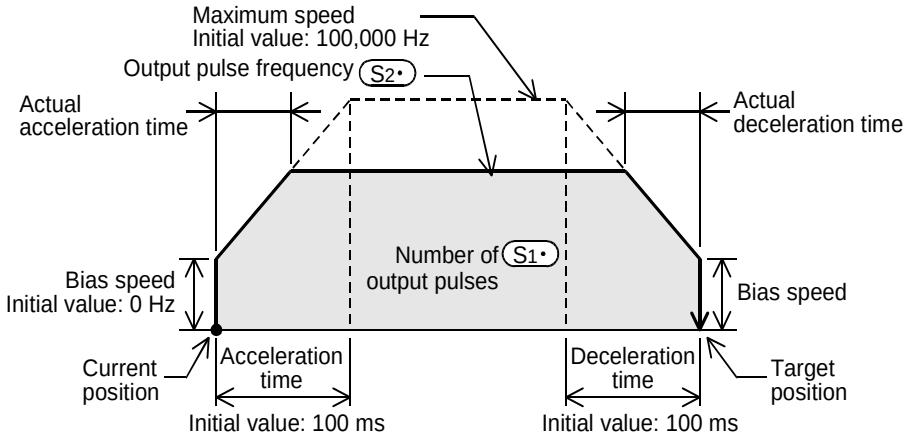

2. Variable speed Pulse Output (PLSV) instruction

For the variable speed pulse output (PLSV) instruction, it is necessary to specify the maximum speed, bias speed, acceleration time, and deceleration time using the related devices in addition to the output pulse frequency specified by the operand of the instruction. However, note that the acceleration time and the deceleration time are valid during acceleration/deceleration (M8338 = ON) only.

→ **For operation of PLSV instruction, refer to Chapter 10.**
→ **For details on each setting item, refer to Subsection 4.2.2 , and Subsection 4.2.5 to Subsection 4.2.8.**

1) When acceleration/deceleration is being performed (M8338 = ON)

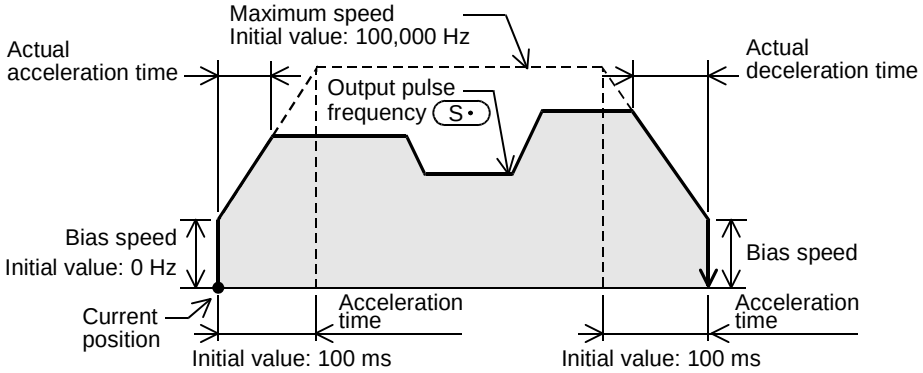

2) When acceleration/deceleration is not performed (M8338 = OFF)

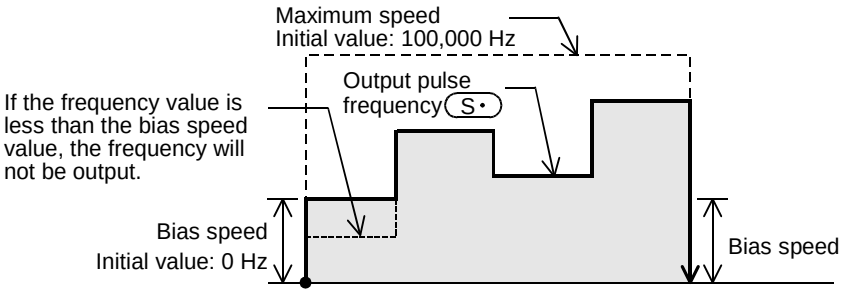

3. Zero return instruction with DOG search function (DSZR)

For this instruction, it is necessary to specify the maximum speed, bias speed, acceleration time, deceleration time, zero return speed, and creep speed using the related devices.

→ **For operation of DSZR instruction, refer to Section 6.2.**
→ **For details on each setting item, refer to Subsection 4.2.3 to Subsection 4.2.8.**

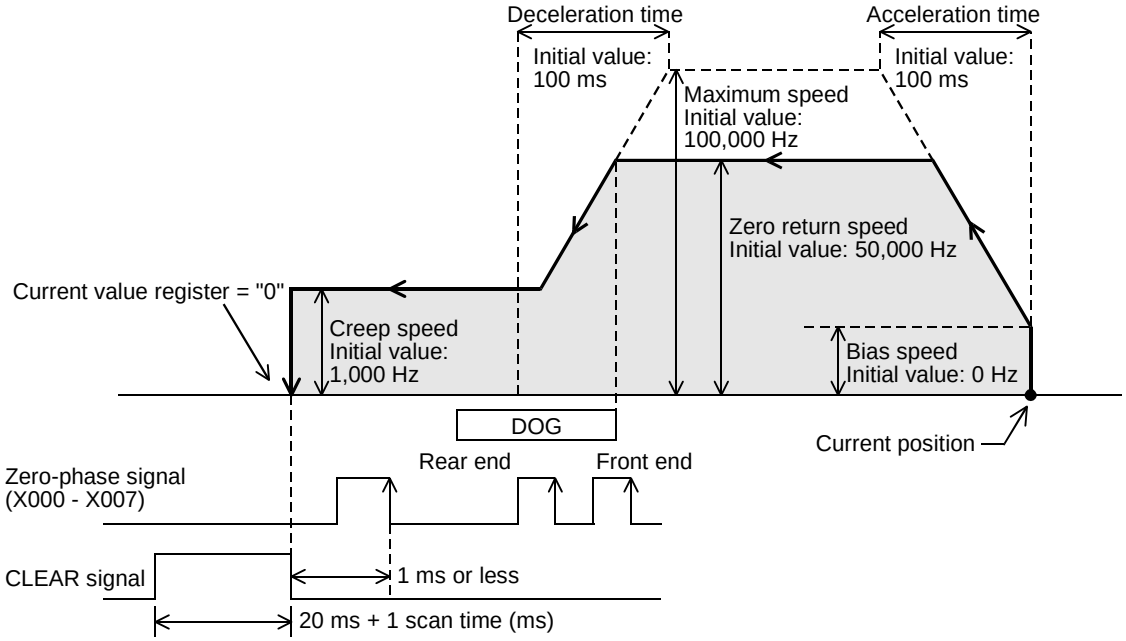

4. Zero return (ZRN) instruction

For this instruction, it is necessary to specify the maximum speed, bias speed, acceleration time, and deceleration time using the related devices in addition to the zero return speed and the creep speed specified by the operand of the instruction.

→ **For operation of ZRN instruction, refer to Section 6.1.**
→ **For details on each setting item, refer to Subsection 4.2.5 to Subsection 4.2.8.**

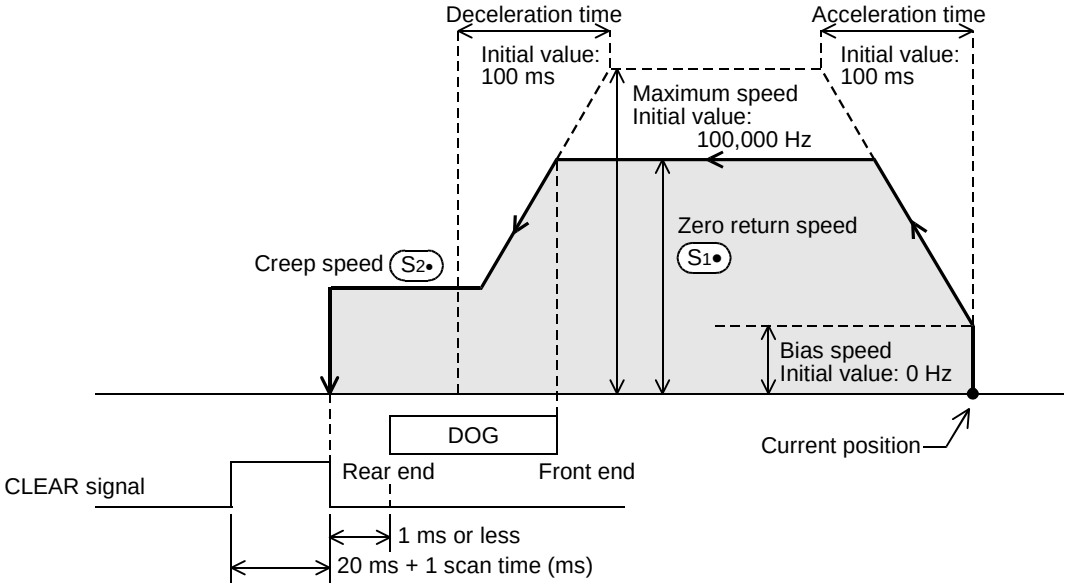

4.2.2 Setting of Output Pulse Frequency (DVIT, PLSV, DRVI, and DRVA Instructions)

Set the output pulse frequency using the operand of each instruction. In this case, the setting range depends on the instruction (see the following table).
However, even in the setting range of each instruction, if the set value of the output pulse frequency is more than the maximum speed value, operation will be performed at the maximum speed. If the set value of the output pulse frequency is less than the bias speed value, operation will be performed at the bias speed.

→ **For operation of DVIT instruction, refer to Chapter 9.**
→ **For operation of PLSV instruction, refer to Chapter 10.**
→ **For operation of DRVI or DRVA instruction, refer to Chapter 8.**

Instruction	Operand	Setting range		Instruction format
		16-bit operation (Hz)	32-bit operation (Hz)	
DVIT instruction	S2•	10 to 32767	10 to 200,000*1	DVIT S1• S2• D1• D2•
PLSV instruction	S•	-32768 to -1, +1 to 32767	-200,000*2 to -1, +1 to 200,000*1	PLSV S• D1• D2•
DRVI instruction	S2•	10 to 32767	10 to 200,000*1	DRVI S1• S2• D1• D2•
DRVA instruction	S2•	10 to 32767	10 to 200,000*1	DRVA S1• S2• D1• D2•

*1. If FX3U-2HSY-ADP is not used, note that the frequency value cannot be more than 100,000 Hz.

*2. If FX3U-2HSY-ADP is not used, note that the frequency value cannot be less than -100,000 Hz.

Caution:

- To use the main unit (transistor output), set the output pulse frequency (absolute value) to 100,000 Hz or less. If more than 100,000 Hz pulse is output from the transistor output terminal Y000, Y001, Y002 of the main unit to perform operation, the PLC may be damaged.
- Set the output pulse frequency so that the output pulse frequency value can be less than the maximum frequency value of the servo amplifier (driver unit).

4.2.3 Setting of Zero Return Speed (DSZR/ZRN Instruction)

Use the related device or the operand of the instruction to set the zero return speed.
The zero return speed setting range is shown in the following table.
Be sure to set the zero return speed so that the relation with the other speeds can be "bias speed ≤ zero return speed ≤ maximum speed". If the set value of the zero return speed is more than the maximum speed value, operation will be performed at the maximum speed.

→ **For operation of DSZR instruction, refer to Section 6.2.**
→ **For operation of ZRN instruction, refer to Section 6.3.**

Instruction		Operand or related device	Setting range 16-bit operation (Hz)	Setting range 32-bit operation (Hz)	Instruction format
DSZR instruction	(D1•)=Y000	D8347,D8346	10 to 200,000*1 Initial value: 50000		DSZR (S1•) (S2•) (D1•) (D2•)
	(D1•)=Y001	D8357,D8356			
	(D1•)=Y002	D8367,D8366			
	(D1•)=Y003*2	D8377,D8376			
ZRN instruction		(S1•)	10 to 32767	10 to 200,000*1	ZRN (S1•) (S2•) (S3•) (D•)

*1. If FX3U-2HSY-ADP is not used, note that this value cannot be more than 100,000 Hz.

*2. Devices related to Y003 (pulse output destination) are valid only if two FX3U-2HSY-ADP adapters are connected to the FX3U PLC.

Caution:

- When using the transistor output of main unit, set the pulse frequency for zero return speed less than 100,000 Hz. If the transistor output (Y000, Y001, Y002) of the main unit uses a pulse frequency of more than 100,000 Hz to perform operation, the PLC may be damaged.
- Set the zero return speed so that the set value of the zero return speed can be less than the maximum frequency value of the servo amplifier (driver unit).

4.2.4 Setting of Creep Speed (DSZR/ZRN Instruction)

Use the related device or the operand of the instruction to set the creep speed. The creep speed setting range is shown in the following table.
Be sure to set the creep speed so that the relation with the other speeds can be "bias speed ≤ creep speed ≤ 32767 Hz*1".

→ **For operation of DSZR instruction, refer to Section 6.2.**
→ **For operation of ZRN instruction, refer to Section 6.3.**

Instruction		Operand or related device	Setting range 16-bit operation (Hz)	Setting range 32-bit operation (Hz)	Instruction format
DSZR instruction	D1• =Y000	D8345	10 to 32767 Initial value: 1000		DSZR S1• S2• D1• D2•
	D1• =Y001	D8355			
	D1• =Y002	D8365			
	D1• =Y003*2	D8375			
ZRN instruction		S2•	10 to 32767		ZRN S1• S2• S3• D•

*1. If the maximum speed is set to less than 32767 Hz, note that this value (32767 Hz) should be changed to the maximum speed.

*2. Devices related to Y003 (pulse output destination) are valid only if two FX3U-2HSY-ADP adapters are connected to the FX3U PLC.

4.2.5 Setting of Maximum Speed

Set the maximum speed to determine the upper limit value for the output pulse frequency and the zero return speed.
Use the devices shown in the following table to determine the maximum speed for each pulse output destination device.

Pulse output destination device	Maximum speed	Initial value	Setting range: Transistor output of main unit	Setting range: High-speed output special adapter
Y000	D8344,D8343	100,000Hz	10 to 100,000 Hz: If the value is set to 9 Hz or less, the maximum speed will be automatically set to 10 Hz.	10 to 200,000 Hz: If the value is set to 9 Hz or less, the maximum speed will be automatically set to 10 Hz.
Y001	D8354,D8353			
Y002	D8364,D8363			
Y003*1	D8374,D8373			

*1. Devices related to Y003 (pulse output destination) are valid only if two FX3U-2HSY-ADP adapters are connected to the FX3U PLC.

Caution:

- To use the main unit (transistor output), set the output pulse frequency (absolute value) to 100,000 Hz or less. If more than 100,000 Hz pulse is output from the transistor output terminal Y000, Y001, Y002 of the main unit to perform operation, the PLC may be damaged.
- Set the output pulse frequency so that the output pulse frequency value can be less than the maximum frequency value of the servo amplifier (driver unit).

4.2.6 Setting of Bias Speed

To control the stepping motor using each instruction, set the bias speed considering the resonance range of the stepping motor and the automatic start frequency.
Use the devices shown in the following table to determine the bias speed for each pulse output destination device.

Pulse output destination device	Bias speed	Initial value	Setting range
Y000	D8342	0Hz	1/10 or less of maximum speed: If the value is set to more than 1/10 of the maximum speed, the bias speed will be automatically set to 1/10 of the maximum speed.
Y001	D8352		
Y002	D8362		
Y003*1	D8372		

*1. Devices related to Y003 (pulse output destination) are valid only if two FX3U-2HSY-ADP adapters are connected to the FX3U PLC.

4.2.7 Setting of Acceleration Time

Set the time required for acceleration from the bias speed to the maximum speed.
If the output pulse frequency is less than the maximum speed, the actual acceleration time will be shorter than the set acceleration time.
If the variable speed pulse output (PLSV) instruction is used, the set acceleration time will be valid during acceleration/deceleration (M8338 = ON) only.
Use the devices shown in the following table to determine the acceleration time for each pulse output destination device.

Pulse output destination device	Acceleration Time	Initial value	Setting range
Y000	D8348	100ms	50 to 5,000 ms: If the value is set to 49 ms or less, the acceleration time will be automatically set to 50 ms. If the value is set to 5,001 ms or more, the acceleration time will be automatically set to 5,000 ms.
Y001	D8358		
Y002	D8368		
Y003*1	D8378		

*1. Devices related to Y003 (pulse output destination) are valid only if two FX3U-2HSY-ADP adapters are connected to the FX3U PLC.

4.2.8 Setting of Deceleration Time

Set the time required for deceleration from the maximum speed to the bias speed.
If the output pulse frequency is less than the maximum speed, the actual deceleration time will be shorter than the set deceleration time.
If the variable speed pulse output (PLSV) instruction is used, the set deceleration time will be valid during acceleration/deceleration (M8338 = ON) only.
Use the devices shown in the following table to determine the deceleration time for each pulse output destination device.

Pulse output destination device	Acceleration Time	Initial value	Setting range
Y000	D8349	100ms	50 to 5,000 ms: If the value is set to 49 ms or less, the deceleration time will be automatically set to 50 ms. If the value is set to 5,001 ms or more, the deceleration time will be automatically set to 5,000 ms.
Y001	D8359		
Y002	D8369		
Y003*1	D8379		

*1. Devices related to Y003 (pulse output destination) are valid only if two FX3U-2HSY-ADP adapters are connected to the FX3U PLC.

4.3 Various Flags for Operation Commands

4.3.1 Forward Rotation Limit and Reverse Rotation Limit

When using the servo motor, the forward rotation limit and the reverse rotation limit can be set for the servo amplifier.
To use the DOG search function for zero return, or to set the forward rotation limit or the reverse rotation limit for operation other than zero return using the PLC, set forward rotation limit 1 (LSF) and reverse rotation limit 1 (LSR) for the PLC so that these limit switches can be activated before forward rotation limit 2 or reverse rotation limit 2 of the servo amplifier.
As shown in the following figure, interlock forward rotation limit 1 (LSF) with the forward limit flag, and reverse rotation limit 1 (LSR) with the reverse limit flag. If the forward limit flag or the reverse limit flag turns ON, the motor will perform operation depending on the output instruction as shown in the following table.

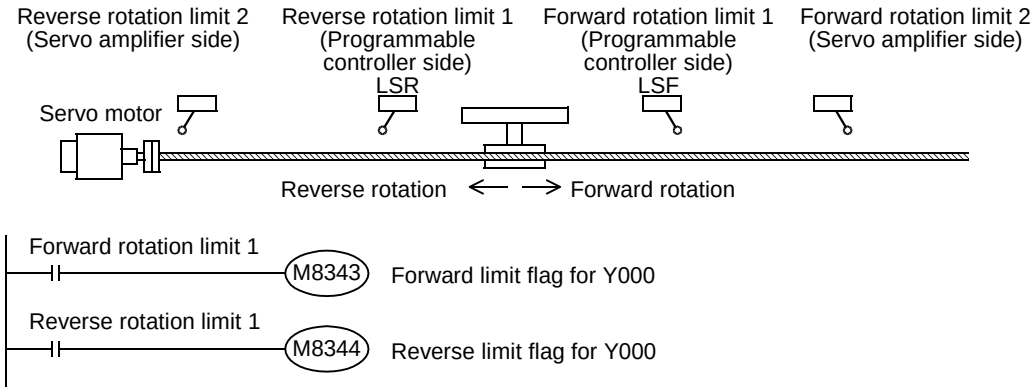

Use the flag shown in the following table to determine the forward rotation limit and the reverse rotation limit for each pulse output destination device (Y000, Y001, Y002, Y003).

Pulse output destination device	Forward limit flag	Reverse limit flag	Corresponding instruction and stop	
			PLSV instruction (M8338*2 =OFF)	DSZR, DVIT, ZRN, PLSV(M8338*2 =ON), DRVI, and DRVA instructions
Y000	M8343	M8344	If the corresponding rotation limit flag is turned on, pulse output (operation) will be immediately stopped.	If the corresponding rotation limit flag is turned on, the speed will be reduced, and then operation will be stopped.
Y001	M8353	M8354		
Y002	M8363	M8364		
Y003*1	M8373	M8374		

*1. Devices related to Y003 (pulse output destination) are valid only if two FX3U-2HSY-ADP adapters are connected to the FX3U PLC.

*2. The M8338 is compatible with Ver.2.00 or later. If the FX3UC PLC is used and its version is below Ver.2.00, PLSV instruction will perform operation in the M8338 = OFF mode (will perform operation without acceleration/deceleration).

Note:

If the forward rotation limit (LSF) and the reverse rotation limit (LSR) cannot be set, observe the following items:

- Even if forward rotation limit 2 or reverse rotation limit 2 turns ON and the servo motor is automatically stopped, the positioning instruction currently activated cannot recognize the stop of the motor. So the pulse will be continuously output until the instruction is deactivated.
- The DOG search function of DSZR instruction (zero return instruction with DOG search function) cannot be used.

4.3.2 Immediate Stop of Pulse Output (Pulse Output Stop Command Flag)

During execution of positioning instruction, if the pulse output stop command flag is turned on, the pulse outputting operation will be immediately stopped.
To output the pulse again, turn off the pulse output stop command flag. After that, deactivate (turn off) the positioning instruction, and then activate it again (turn it on again).
The following table shows the pulse output stop command flag of each pulse output destination device (Y000, Y001, Y002, Y003).

Pulse output destination device	Pulse output stop command flag	Operation
Y000	M8349	During pulse outputting operation, if the pulse output stop command flag of the corresponding pulse output destination device is turned on, the pulse outputting operation will be immediately stopped.
Y001	M8359	
Y002	M8369	
Y003*1	M8379	

*1. Devices related to Y003 (pulse output destination) are valid only if two FX3U-2HSY-ADP adapters are connected to the FX3U PLC.

Note:

Use this flag only if immediate stop is absolutely needed to avoid dangers. Since the motor is immediately stopped, use of this flag may damage the system. For normal STOP operation (decelerated to stop), use "instruction OFF" function or "forward/reverse limit flag."
However, note that if PLSV instruction is used together with "instruction OFF" function or "forward/reverse limit flag" in the M8338 = OFF mode (operation without acceleration/deceleration), operation can be immediately stopped.

4.3.3 Designation of Zero Return Direction (DSZR/ZRN Instruction)

Use DSZR instruction (zero return instruction with DOG search function) or ZRN instruction (zero return instruction) to specify the zero return direction*1. The zero return direction depends on the instruction.

→ **For operation of DSZR instruction, refer to Section 6.2.**
→ **For operation of ZRN instruction, refer to Section 6.3.**

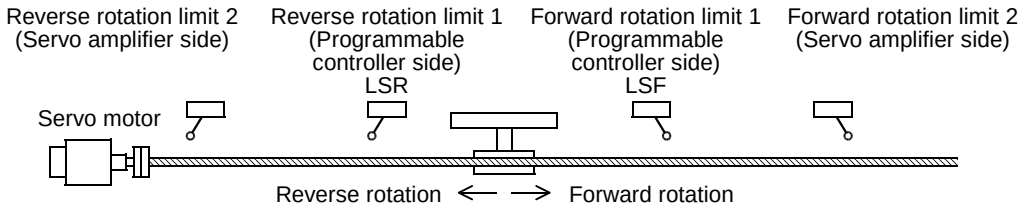

*1. If DSZR instruction (zero return instruction with DOG search function) is used, zero return will be performed in the direction of the first operation.

1. Zero return instruction with DOG search function (DSZR instruction)

Turn on or off the zero return direction designation flag shown in the following table to specify the zero return direction.

Pulse output destination device	Zero return direction designation flag	Description of setting
Y000	M8342	To perform zero return in the normal rotation direction:Turn on the flag. To perform zero return in the reversed rotation direction:Turn off the flag.
Y001	M8352	
Y002	M8362	
Y003*1	M8372	

*1. Devices related to Y003 (pulse output destination) are valid only if two FX3U-2HSY-ADP adapters are connected to the FX3U PLC.

2. Zero return instruction (ZRN instruction)

Zero return will be performed in the reverse rotation direction only.
(During zero return, the value indicated by the current value register will be reduced.)

To perform zero return in the forward rotation direction using ZRN instruction (zero return instruction):

To perform zero return in the forward rotation direction, create a program to control the output (Y) relay set as a "rotational direction signal" as follows:

→ **For details on programming, refer to Section 4.7.**
→ **To use main unit (transistor output), refer to Section 4.8.**
→ **To use high-speed output special adapter, refer to Section 4.9.**

1) Turn on Y□□□ (rotational direction signal).
2) Refresh Y□□□ output using REF (FNC50) instruction.
3) Execute ZRN instruction (zero return instruction).
4) Using the execution completion flag (M8029) of ZRN instruction (zero return instruction), reset Y□□□ (rotational direction signal).

Example of program:
The following program uses Y004 as the rotational direction signal for Y000.

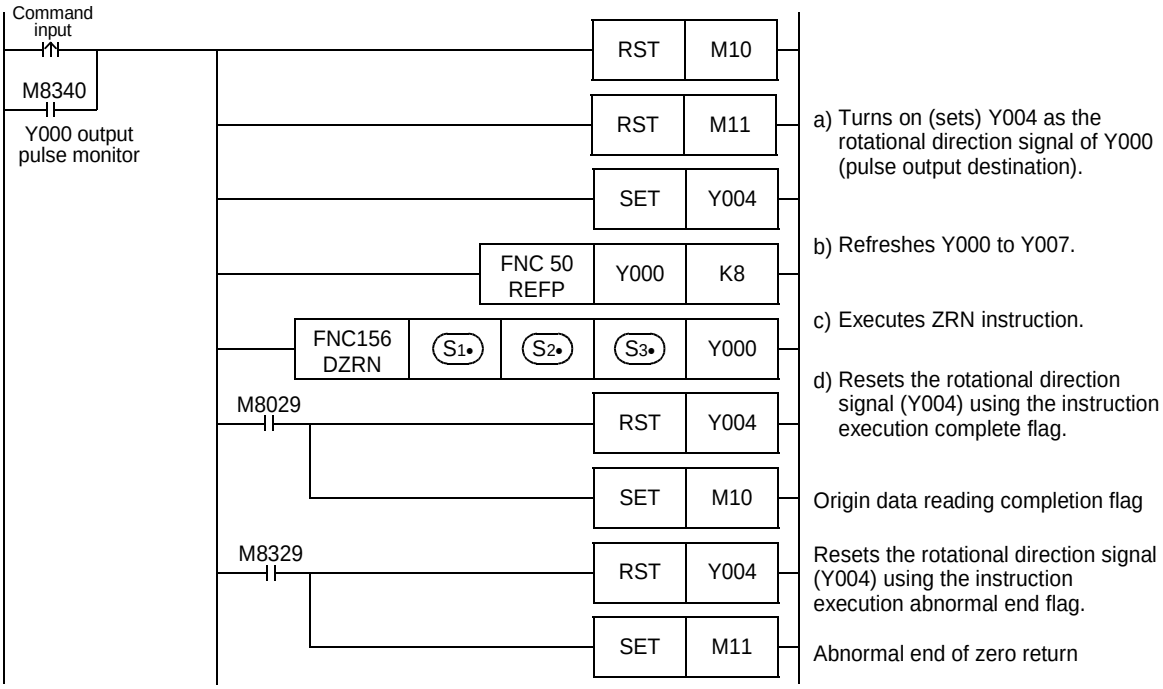

4.3.4 CLEAR Signal Output (DSZR/ZRN Instruction)

DSZR instruction (zero return instruction with DOG search function) and ZRN instruction (zero return instruction) can stop the workpiece at the origin, and can output the CLEAR signal.
If it is necessary to output the CLEAR signal to perform zero return, turn on "CLEAR signal output function enable" flag. The following table shows "CLEAR signal output function enable" flag of each pulse output destination device (Y000, Y001, Y002, Y003).
Use the FX3U/FX3UC PLC of Ver. 2.00 or later to specify the device that outputs the CLEAR signal.

→ **For operation of DSZR instruction, refer to Section 6.2.**
→ **For operation of ZRN instruction, refer to Section 6.3.**

1. If it is not necessary to use the clear signal device specification function, or if the FX3UC PLC of below Ver. 2.00 is used:

Pulse output destination device	Status of "CLEAR signal output function enable" flag	Status of "Clear signal device specification function enable" flag*1	CLEAR signal device number
Y000	M8341=ON	M8464=OFF	Y004
Y001	M8351=ON	M8465=OFF	Y005
Y002	M8361=ON	M8466=OFF	Y006
Y003*2	M8371=ON	M8467=OFF	Y007

*1. Use the FX3U/FX3UC PLC of Ver. 2.00 or later to use "Clear signal device specification function enable" flag.

*2. Devices related to Y003 (pulse output destination) are valid only if two FX3U-2HSY-ADP adapters are connected to the FX3U PLC.

2. If it is necessary to use the Clear signal device specification function:

FX3UC Ver.2.00 FX3U Ver.2.00

Turn on "Clear signal device specification function enable" flag to specify the CLEAR signal (output Y) for the pulse output destination device using the Clear signal device specification device.

Pulse output destination device	Status of "CLEAR signal output function enable" flag	Status of "Clear signal device specification function enable" flag	CLEAR signal device number	
			Clear signal device specification device	Initial value (CLEAR signal device)
Y000	M8341=ON	M8464=ON	D8464	-
Y001	M8351=ON	M8465=ON	D8465	-
Y002	M8361=ON	M8466=ON	D8466	-
Y003*1	M8371=ON	M8467=ON	D8467	-

*1. Devices related to Y003 (pulse output destination) are valid only if two FX3U-2HSY-ADP adapters are connected to the FX3U PLC.

→ **For the Clear signal device specification method, refer to the next page.**

If it is necessary to use the high-speed output special adapter:

The output device initially set for CLEAR signal of DSZR/ZRN instruction is the same output device as "direction signal / reverse pulse train (rotation direction signal)" of high-speed output special adapter. Be sure to specify the output number of the other transistor output using the CLEAR signal designation function.

Clear signal device specification method:

1) Write the CLEAR signal output (Y) device number in "Clear signal device specification" device by a hexadecimal number (expressed octal numbers).
   e.g. setting H0010 means Y010. When setting H0008, an operation error occurs because Y008 does not exist.
2) Turn on "CLEAR signal output enable" flag and "Clear signal device specification function enable" flag of the pulse output designation device to specify the CLEAR signal device.
3) Execute DSZR instruction (zero return instruction with DOG search function) or ZRN instruction (zero return instruction).

Example of program:
The following figure shows a program that can specify Y010 as the CLEAR signal output device for Y000 (pulse output destination device):

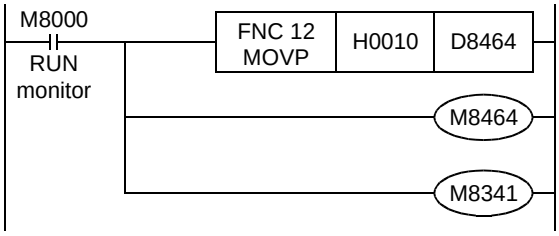

Specifies the Y010 as the CLEAR signal output device for the Y000 (pulse output destination device).

Turns on "CLEAR signal device designation function enable" flag of the Y000 (pulse output destination device).

Turns on "CLEAR signal output enable" flag.

4.3.5 Change in Logic of Near-Point (DOG) Signal (DSZR Instruction)

Turn on or off "DOG signal logic reverse" flag to specify the logic of the near-point (DOG) signal of DSZR instruction (zero return instruction with DOG search function). Use the operand (S1•) of the instruction to specify the near-point (DOG) signal.

→ **For operation of DSZR instruction, refer to Section 6.2.**

Pulse output destination device	"DOG signal logic reverse" flag	Description of setting
Y000	M8345	OFF: Positive logic (Turning on the input will turn on the near-point signal.) ON: Negative logic (Turning off the input will turn on the near-point signal.)
Y001	M8355	
Y002	M8365	
Y003*1	M8375	

*1. Devices related to Y003 (pulse output destination) are valid only if two FX3U-2HSY-ADP adapters are connected to the FX3U PLC.

4.3.6 Change in Logic of Zero-Phase Signal (DSZR Instruction)

Turn on or off "Zero point signal logic reverse" flag to specify the logic of the zero-phase signal of DSZR instruction (zero return instruction with dog search function). Use the operand (S2•) of the instruction to specify the zero-phase signal.

→ **For operation of DSZR instruction, refer to Section 6.2.**

Pulse output destination device	"Zero point signal logic reverse" flag	Description of setting
Y000	M8346	OFF: Positive logic (Turning on the input will turn on the zero-phase signal.) ON: Negative logic (Turning off the input will turn on the zero-phase signal.)
Y001	M8356	
Y002	M8366	
Y003*1	M8376	

*1. Devices related to Y003 (pulse output destination) are valid only if two FX3U-2HSY-ADP adapters are connected to the FX3U PLC.

4.3.7 Designation of interrupt input Signal for DVIT Instruction

The interrupt input signal of the interrupt positioning (DVIT) instruction depends on the pulse output destination device as shown in the following table.
Use the FX3UC PLC of Ver. 1.30 or later to specify the interrupt input signal.
Use the FX3U/FX3UC PLC of Ver. 2.00 or later to set the user interruption command device.

→ **For operation of DVIT instruction, refer to Chapter 9.**

Pulse output destination device	Interrupt input signal	
	If it is not necessary to use the interrupt input designation function (M8336 = OFF), or if the FX3UC PLC of below Ver. 1.30 is used	**If it is necessary to use the interrupt input designation function (M8336 = ON)**
Y000	X000	D8336=H○○○○ ○ Interrupt input for Y000 (pulse output destination device) ○ Interrupt input for Y001 (pulse output destination device) ○ Interrupt input for Y002 (pulse output destination device) ○ Interrupt input for Y003 (pulse output destination device)
Y001	X001	
Y002	X002	
Y003*1	X003	

*1. Devices related to Y003 (pulse output destination) are valid only if two FX3U-2HSY-ADP adapters are connected to the FX3U PLC.

Designation of interrupt input using M8336:

1) Turn on the M8336.
2) Set the interrupt input number (X000 to X007) in the D8336, or specify the user interruption command device*1.

→ **For example of specifying program, refer to the following description.**

D8336=H○○○○
○ Interrupt input for Y000 (pulse output destination device)
○ Interrupt input for Y001 (pulse output destination device)
○ Interrupt input for Y002 (pulse output destination device)
○ Interrupt input for Y003 (pulse output destination device)

Setting value	Description of setting
0	Specifies X000 for the interrupt input signal.
1	Specifies X001 for the interrupt input signal.
~	~
7	Specifies X007 for the interrupt input signal.
8*1	Specifies the user interruption command device*1 for the interrupt input signal. Pulse output destination device / User interruption command device Y000 / M8460 Y001 / M8461 Y002 / M8462 Y003*2 / M8463
9 to E*3	Do not specify these values.
F*3	Set "F" for a pulse output destination device if the device is not used for the interrupt positioning (DVIT) instruction.

*1. The device can be specified if the FX3U/FX3UC PLC of Ver. 2.00 or later is used.
Using the FX3UC PLC of below Ver. 2.00, if "8" is set and then the specified interrupt positioning (DVIT) instruction turns ON, an operation error (error code: K6763) will occur, and the instruction will not cause any operation.

*2. Devices related to Y003 (pulse output destination) are valid only if two FX3U-2HSY-ADP adapters are connected to the FX3U PLC.

*3. After setting a number in the range of 9 to F for the interrupt input signal, if the corresponding interrupt positioning (DVIT) instruction turns ON, an operation error (error code: K6763) will occur, and the instruction will not cause any operation.

Example of program:
The following program Specification of interrupt input signal for each pulse output destination device as shown in the following table.

Pulse output destination device	Interrupt input signal	Setting value
Y000	X003	3
Y001	M8461	8
Y002	Unused	F
Y003*1	Unused	F

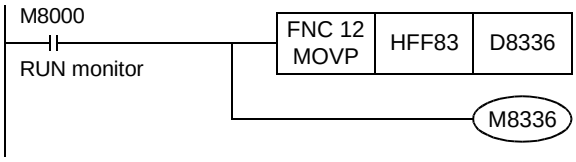

*1. Devices related to Y003 (pulse output destination) are valid only if two FX3U-2HSY-ADP adapters are connected to the FX3U PLC.

4.3.8 Change in Logic of interrupt input Signal (DVIT Instruction)

Turn "Interrupt signal logic reverse" flag ON or OFF to specify the logic of the interrupt input signal of each interrupt positioning (DVIT) instruction.

→ **For operation of DVIT instruction, refer to Chapter 9.**
→ **For details on the interrupt input signal designation method, refer to Subsection 4.3.7.**

Pulse output destination device	"Interrupt signal logic reverse" flag	Description
Y000	M8347	OFF: Positive logic (Turning on the input will turn on the interrupt input signal.) ON: Negative logic (Turning off the input will turn on the interrupt input signal.)
Y001	M8357	
Y002	M8367	
Y003*1	M8377	

*1. Devices related to Y003 (pulse output destination) are valid only if two FX3U-2HSY-ADP adapters are connected to the FX3U PLC.

Caution:

If a user interruption command device (M8360 to M8463) is specified in the interrupt input signal, the logic of the user interruption command device cannot be specified. This is because turning on the user interruption command device will turn on the interrupt input signal.

4.3.9 Acceleration/Deceleration by PLSV Instruction

Using the FX3U/FX3UC PLC of Ver. 2.00 or later, if the M8338 (acceleration/deceleration operation) is turned on, the variable speed pulse output (PLSV) instruction will be activated to accelerate/decelerate the operation.
This means that if the command value of the output pulse frequency is changed, the operation will be accelerated or decelerated to the changed output pulse frequency depending on the specified acceleration/deceleration time.

→ **For operation of PLSV instruction, refer to Chapter 10.**

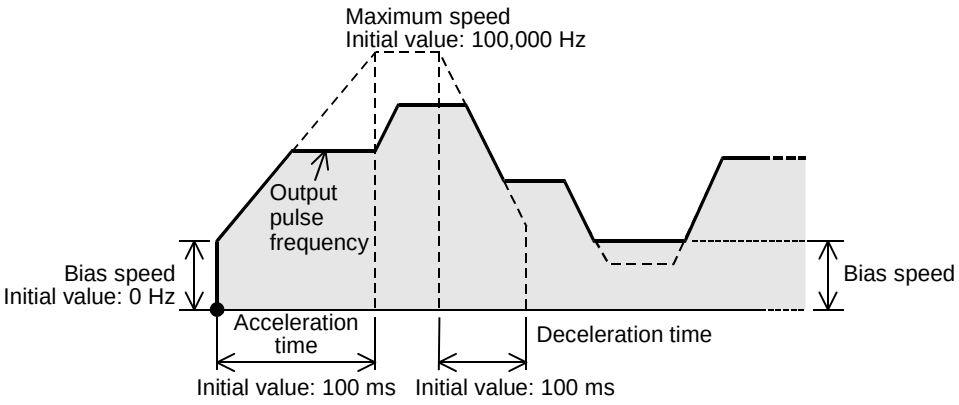

Caution:

- To enable acceleration/deceleration, turn on the M8338 first, and then activate the variable speed pulse output (PLSV) instruction.
- If acceleration/deceleration is enabled, the variable speed pulse output (PLSV) instructions of all the pulse output destination devices will accelerate/decelerate the operation. This means that acceleration/deceleration cannot be specified for each pulse output destination device.

4.4 Current Value and Flag for Monitoring of Operation

4.4.1 Current Value

During positioning operation, use the current value register to check the current value. The current value will be increased or decreased depending on the rotation direction. The following table shows the current value register (32-bit) of each pulse output destination device (Y000, Y001, Y002, Y003).

Pulse output destination device	Current value register (32-bit)
Y000	D8341,D8340
Y001	D8351,D8350
Y002	D8361,D8360
Y003*1	D8371,D8370

*1. Devices related to Y003 (pulse output destination) are valid only if two FX3U-2HSY-ADP adapters are connected to the FX3U PLC.

Caution:

The current value will be counted in the range of -2,147,483,648 to 2,147,483,647. If the current value exceeds this range, the following value will be indicated. Be careful not to exceed the later range.

- If the current value is increased past the maximum value, the minimum value will be indicated.
- If the current value is decreased below the minimum value, the maximum value will be indicated.

Necessity of zero return:

If the specified forward rotation pulse or the reverse rotation pulse is output, the current value register will increase or reduce the current value. Upon turning off the power of the PLC, however, the current value stored in the current value register will be erased. For this reason, after turning the power on again, be sure to adjust the current value of the current value register to the current position of the machine. For this adjustment, use the zero return instruction or the Absolute Current Value Read instruction (absolute position detection system) shown below:

→ **For details on DSZR instruction, refer to Section 6.2.**
→ **For details on ZRN instruction, refer to Section 6.3.**
→ **For details on ABS instruction, refer to Chapter 7.**

Instruction	Description
DSZR(FNC150)	Zero return instruction with DOG search function
ZRN(FNC156)	Zero return instruction (without DOG search function)
ABS(FNC155)*2	Absolute Current Value Read instruction

*2. The absolute position detection function is adopted for the MR-H□A, MR-J2□A MR-J2S□A, or MR-J3□A servo amplifiers. If one of these servo amplifiers is adopted and mechanical zero return is performed only once just before turning off the power, the current value will not be erased even after power-off.
After turning on the power again, read out the stored current value using ABS (FNC155) instruction of the PLC. This means that the current value can be obtained without performing zero return just after turning on the power again.

4.4.2 Completion of Execution of Instruction ("Instruction execution complete" Flag, "Instruction execution abnormal end" Flag)

Use "Instruction execution complete" flag or "Instruction execution abnormal end" flag to check whether execution of the positioning instruction is completed properly.
"Instruction execution complete" flag and "Instruction execution abnormal end" flag can be turned on or off for each instruction. Use these flags just after execution of each instruction.

→ **For details on programming, refer to Subsection 4.7.4.**

- "Instruction execution complete" flag: Will be turned on if the instruction is executed properly.
- "Instruction execution abnormal end" flag: Will be turned on if the instruction is not executed properly.

Caution:

If "Instruction execution complete" flag or "Instruction execution abnormal end" flag is turned on, then the execution of the instruction (pulse outputting operation, etc.) is completed. However, it is not certain whether the servo motor is stopped. Check "positioning completion" signal or "servo ready" signal of the servo amplifier (drive unit) to check whether the servo motor is stopped.

4.4.3 "Pulse Output Monitor" (BUSY/READY) Flag

Use "pulse output monitor" (BUSY/READY) flag to check whether the pulse is being output to the pulse output destination device. The following table shows "pulse output monitor" (BUSY/READY) flag of each pulse output destination device (Y000, Y001, Y002, Y003).

Pulse output destination device	"Pulse output monitor" (BUSY/READY) flag	Statuses of flag and pulse
Y000	M8340	Outputting pulse (BUSY):Flag = ON Pulse outputting stopped (READY):Flag = OFF
Y001	M8350	
Y002	M8360	
Y003*1	M8370	

*1. Devices related to Y003 (pulse output destination) are valid only if two FX3U-2HSY-ADP adapters are connected to the FX3U PLC.

4.4.4 "Positioning Instruction Activation" Flag

Use "positioning instruction activation" flag of each pulse output destination device to check whether or not the positioning instruction is being executed for the pulse output destination. Use this flag to prevent simultaneous activation of two or more positioning instructions in the same pulse output destination device.

Pulse output destination device	"Positioning instruction Activation" flag	Statuses of flag and pulse
Y000	M8348	ON: The positioning instruction is being activated for the corresponding pulse output destination. (Even after completing execution of the instruction, if the instruction is still activated, the flag will not be turned off.) OFF: The positioning instruction is not being activated for the corresponding pulse output destination.
Y001	M8358	
Y002	M8368	
Y003*1	M8378	

*1. Devices related to Y003 (pulse output destination) are valid only if two FX3U-2HSY-ADP adapters are connected to the FX3U PLC.

4.5 Setting of Various Items on PLC Side

4.5.1 Setting of Common Items Using Program

For each pulse output destination device (Y000, Y001, Y002, Y003*1), set the items shown in the following table without using the operand of the instruction.

Setting item	Setting device				Instruction								Refer to
	Y000	Y001	Y002	Y003*1	DSZR	ZRN	ABS	TBL	PLSV	DVIT	DRVI	DRVA	
Items related to speed													
Maximum speed*2	D8344, D8343	D8354, D8353	D8364, D8363	D8374, D8373	✓	✓	-	✓*3	✓	✓	✓	✓	Subsec-tion 4.2.5
Bias speed	D8342	D8352	D8362	D8372	✓	✓	-	✓*3	✓	✓	✓	✓	Subsec-tion 4.2.6
Acceleration time	D8348	D8358	D8368	D8378	✓	✓	-	✓*3	✓*4	✓	✓	✓	Subsec-tion 4.2.7
Deceleration time	D8349	D8359	D8369	D8379	✓	✓	-	✓*3	✓*4	✓	✓	✓	Subsec-tion 4.2.8
Zero return speed*2	D8347, D8346	D8357, D8356	D8367, D8366	D8377, D8376	✓	-	-	-	-	-	-	-	Subsec-tion 4.2.3
Creep speed	D8345	D8355	D8365	D8375	✓	-	-	-	-	-	-	-	Subsec-tion 4.2.4
Items specially needed for (DSZR) zero return instruction with DOG search function and (ZRN) zero return instruction)													
Zero return direction	M8342	M8352	M8362	M8372	✓	✓*5	-	-	-	-	-	-	Subsec-tion 4.3.3
CLEAR signal output	M8341	M8351	M8361	M8371	✓	✓	-	-	-	-	-	-	Subsec-tion 4.3.4
CLEAR signal device change*6	M8464 D8464	M8465 D8465	M8466 D8466	M8467 D8467	✓	✓	-	-	-	-	-	-	Subsec-tion 4.3.4
Logic of near-point signal	M8345	M8355	M8365	M8375	✓	✓	-	-	-	-	-	-	Subsec-tion 4.3.5
Logic of zero-phase signal	M8346	M8356	M8366	M8376	✓	-	-	-	-	-	-	-	Subsec-tion 4.3.6
Items specially needed for variable speed pulse output (PLSV) instruction													
Acceleration/ deceleration Operation*4	M8338				-	-	-	-	✓	-	-	-	Subsec-tion 4.3.9
Items specially needed for interrupt positioning (DVIT) instruction													
Interrupt input signal device change*7	M8336 D8336				-	-	-	✓*3	-	✓	-	-	Subsec-tion 4.3.7

Setting item	Setting device				Instruction								Refer to
	Y000	Y001	Y002	Y003*1	DSZR	ZRN	ABS	TBL	PLSV	DVIT	DRVI	DRVA	
User interrupt input command device*7	M8460	M8461	M8462	M8463	-	-	-	✓*3	-	✓	-	-	Subsec-tion 4.3.7
Logic of interrupt input signal	M8347	M8357	M8367	M8377	-	-	-	✓	-	✓	-	-	Subsec-tion 4.3.8
Forward limit, reverse limit, and immediate stop of pulse output													
Forward limit	M8343	M8353	M8363	M8373	✓	✓	-	✓	✓	✓	✓	✓	Subsec-tion 4.3.1
Reverse limit	M8344	M8354	M8364	M8374	✓	✓	-	✓	✓	✓	✓	✓	Subsec-tion 4.3.1
Immediate stop of pulse output*8	M8349	M8359	M8369	M8379	✓	✓	-	✓	✓	✓	✓	✓	Subsec-tion 4.3.2

*1. Devices related to Y003 (pulse output destination) are valid only if two FX3U-2HSY-ADP adapters are connected to the FX3U PLC.

*2. 32 bits are adopted for the maximum speed setting device and the zero return speed setting device.

*3. Set this item using the PC parameter (positioning) of GX Developer (Ver.8.23Z or later) and the FX3U/FX3UC PLC of Ver.2.00 or later. The data set by the parameter will be stored in the corresponding device.

*4. To accelerate or decelerate the operation using the variable speed pulse output (PLSV) instruction of the FX3U/FX3UC PLC of Ver.2.00 or later, it is necessary to set this item.
If the operation is not accelerated or decelerated, or if the FX3UC PLC of below Ver.2.00 is used, this instruction will not use this item even if this item is set.

*5. ZRN instruction will not use any zero return direction setting devices. Using the program, adjust the rotation direction output to the zero return direction.

*6. This item can be set using the FX3U/FX3UC PLC of Ver.2.00 or later.

*7. This item can be set using the FX3U/FX3UC PLC of Ver.1.30 or later.
The user interrupt input command device, however, can be set using the FX3U/FX3UC PLC of Ver.2.00 or later.

*8. Use this function only if immediate stop is absolutely needed to avoid danger.

Example of program:

In the following program, the zero return instruction with DOG search function (DSZR), variable speed pulse output (PLSV) instruction, and interrupt positioning (DVIT) instruction are used for the pulse output destination (Y000) under the conditions shown in the following table.

1) Set conditions

Setting item	Description of setting	Related device	Setting value or condition
Items related to speed			
Maximum speed	30000Hz	D8344, D8343 (32-bit)	K30000
Bias speed	10Hz	D8342	K10
Acceleration time	200ms	D8348	K200
Deceleration time	200ms	D8349	K200
Zero return speed	5000Hz	D8347, D8346 (32-bit)	K5000
Creep speed	500Hz	D8345	K500
Items specially needed for DSZR instruction (zero return instruction with DOG search function) and ZRN instruction (zero return instruction)			
Zero return direction	Reverse rotation direction	M8342	OFF
CLEAR signal output	Output to Y010	M8341	ON
CLEAR signal device change*6		M8464	ON
		D8464	H0010
Logic of near-point signal	Sets the positive logic (turning on the input will turn on the near-point signal).	M8345	OFF
Logic of zero-phase signal	Sets the positive logic (turning on the input will turn on the zero-phase signal).	M8346	OFF
Items specially needed for variable speed pulse output (PLSV) instruction			
Acceleration/deceleration Operation	If X012 is turned on, the variable speed pulse output (PLSV) instruction will be activated to accelerate or decelerate the operation.	M8338	ON: If X012 = ON
Items specially needed for interrupt positioning (DVIT) instruction			
Interrupt input signal device change	Sets X007 for interrupt inputs. Interrupt positioning (DVIT) instruction will not be used for the pulse output destinations Y001, Y002, and Y003.	M8336	ON
		D8336	HFFF7
User interrupt input command device	Do not use.	M8460	-
Logic of interrupt input signal	Sets the negative logic (turning off the input will turn on the interruption signal).	M8347	ON
Forward limit, reverse limit, and immediate stop of pulse output			
Forward limit	If X010 is turned off (if the NC contact is turned on), the limit switch will be activated.	M8343	ON: If X010 = OFF
Reverse limit	If X011 is turned off (if the NC contact is turned on), the limit switch will be activated.	M8344	ON: If X011 = OFF
Immediate stop of pulse output	Do not use.	M8349	-

2) Set program

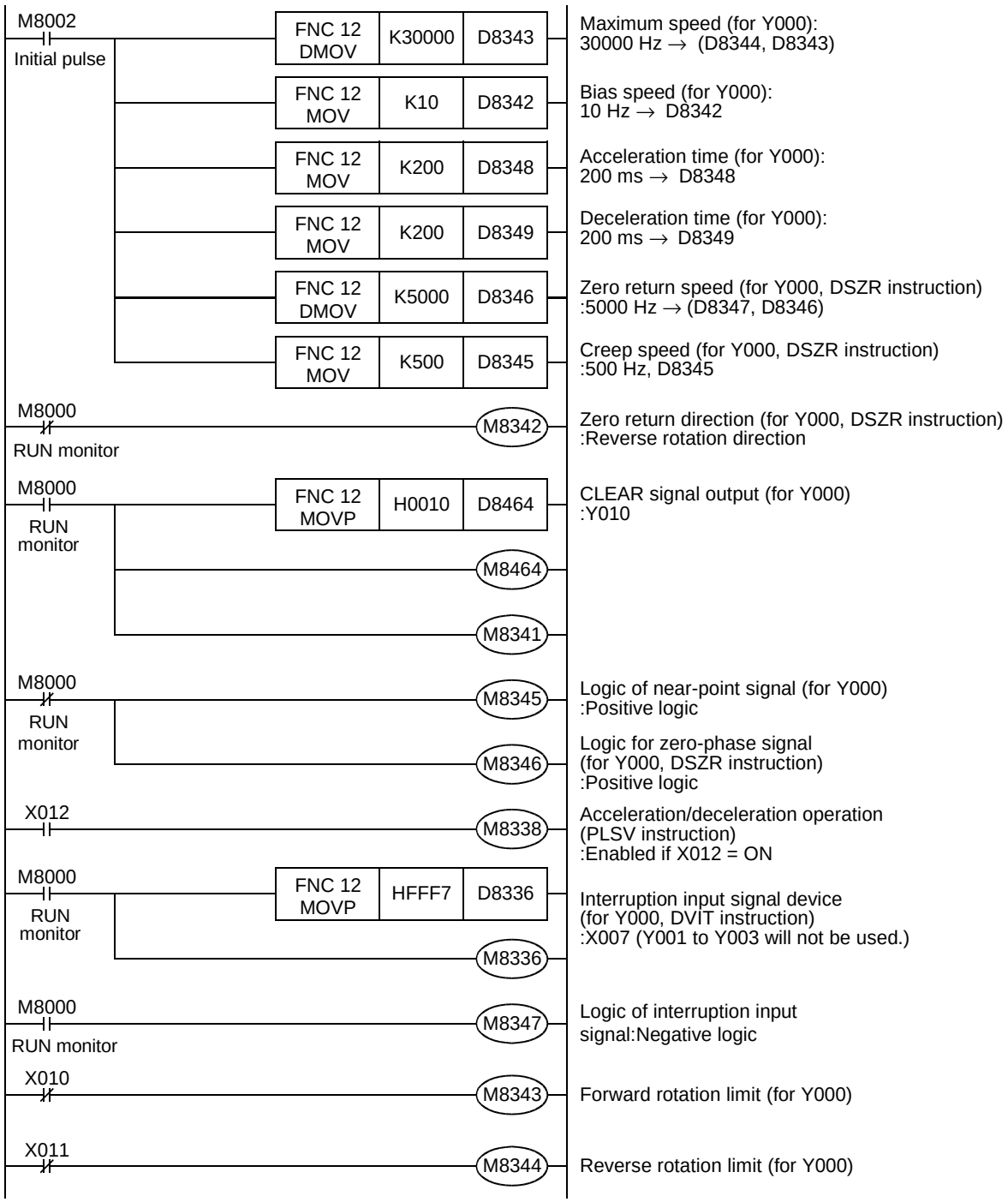

4.5.2 Setting of High-Speed Output Special Adapter

If high-speed output special adapter (FX3U-2HSY-ADP) is used, the pulse output method can be selected from "pulse train + direction" method and "forward/reverse rotation pulse train" method.

1. Setting of pulse output method

Using the pulse output method setting switch of the high-speed output special adapter (FX3U-2HSY-ADP), set the pulse output method as shown in the following table.
The set pulse output method should conform to the command pulse input method set for the servo amplifier (drive unit).

→ **For details on the servo amplifier (drive unit), refer to the manual of the product used in your system.**

Position of pulse output method setting switch	Pulse output method		Logic of command pulse
FP·RP side	Forward rotation pulse train (FP) Reverse rotation pulse train (RP)	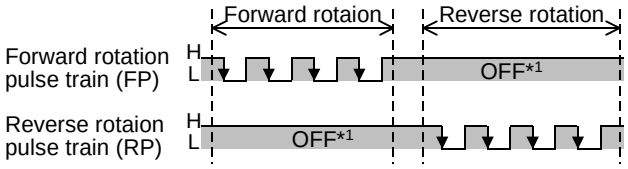	Negative logic
PLS·DIR side	Pulse train + direction	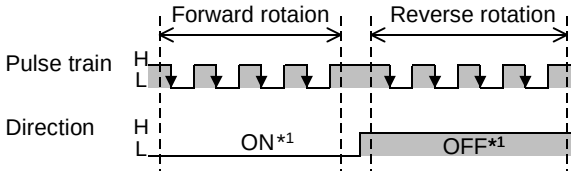	Negative logic

*1. "ON" and "OFF" represent the statuses of the PLC output. "H" and "L" respectively represent the HIGH status and the LOW status of the waveform.

→ **For details on the relation between the PLC output and the waveform, refer to Subsection 4.6.1.**

Caution:

Operate Output Form Setting Switch while PLC is STOP or the power is OFF. Do not operate Output Form Setting Switch while pulse is being generated.

2. Setting of rotation direction signal for positioning instruction

If high-speed output special adapter (FX3U-2HSY-ADP) is used, the rotation direction signal will be assigned to each pulse output destination device as shown in the following table. Set the rotation direction signal of the positioning instruction as shown in the following table:

Position of pulse output method setting switch of high-speed output special adapter	Signal	Name of positioning instruction	Output number			
			The 1st adapter		The 2nd adapter	
			1st axis	2nd axis	3rd axis	4th axis
FP·RP side	Forward rotation pulse train (FP)	Pulse output destination:	Y000	Y001	Y002	Y003
	Reverse rotation pulse train (RP)	Rotation direction signal	Y004	Y005	Y006	Y007
PLS·DIR side	Pulse train	Pulse output destination:	Y000	Y001	Y002	Y003
	Direction	Rotation direction signal	Y004	Y005	Y006	Y007

3. CLEAR signal and rotation direction signal

If high-speed output special adapter (FX3U-2HSY-ADP) is used, the same output will be used for both the CLEAR signal and the rotation direction signal of DSZR (FNC150) or ZRN (FNC156) instruction. For this reason, to output the CLEAR signal, change the CLEAR signal device.

→ **For details on the CLEAR signal device change method, refer to Subsection 4.3.4.**

Pulse output destination device	CLEAR signal device initially set	Rotation direction signal (reverse rotation pulse train / direction)			
		The 1st adapter		The 2nd adapter	
		1st axis	2nd axis	3rd axis	4th axis
Y000	Y004	Y004	-	-	-
Y001	Y005	-	Y005	-	-
Y002	Y006	-	-	Y006	-
Y003	Y007	-	-	-	Y007

4.6 Setting of Various Items on Servo Amplifier (Drive Unit) Side

→ **For details on the servo amplifier (drive unit), refer to the manual of the product used in your system.**

4.6.1 Setting of Command Pulse Input Method

1. Pulse output method on PLC side

1) If the main unit (transistor output (sink output)) is used, the pulse output signals (pulse output destination and rotation direction) will be as shown in the following figure:

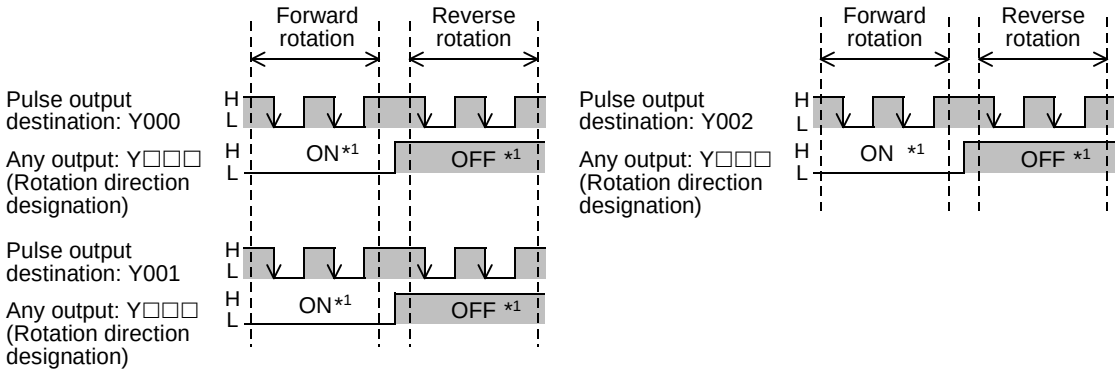

*1. "ON" and "OFF" represent the statuses of the PLC output. "H" and "L" respectively represent the HIGH status and the LOW status of the waveform.

→ **For details on the relation between the PLC output and the waveform, refer to the next page**

2) If the pulse output method setting switch of the high-speed output special adapter is set to "PLS·DIR" position, the pulse output signals (pulse output destination signal and rotation direction signal) will be as shown in the following figure:

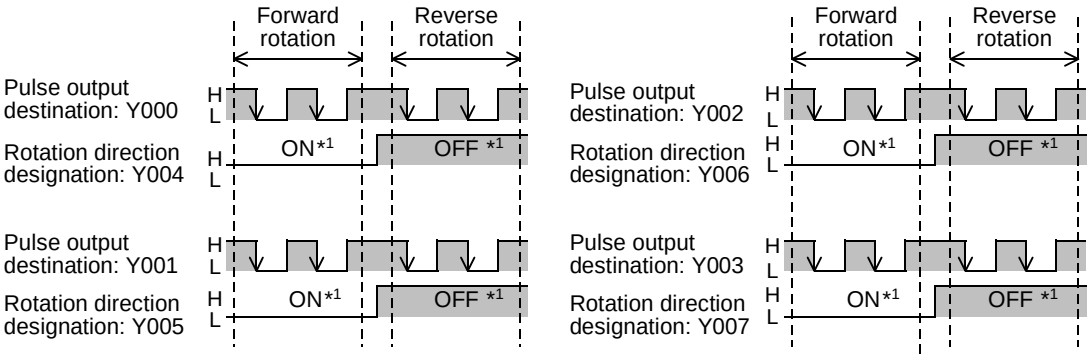

*1. "ON" and "OFF" represent the statuses of the PLC output. "H" and "L" respectively represent the HIGH status and the LOW status of the waveform.

→ **For details on the relation between high-speed output special adapter output and the waveform, refer to the next page.**

3) High-speed output special adapter (Forward/Reverse Pulse Train setting)
When setting Operate Output Form Setting Switch of the high speed output special adapter to "FP•RP" side, the pulse output signals will be as shown in the following figure.

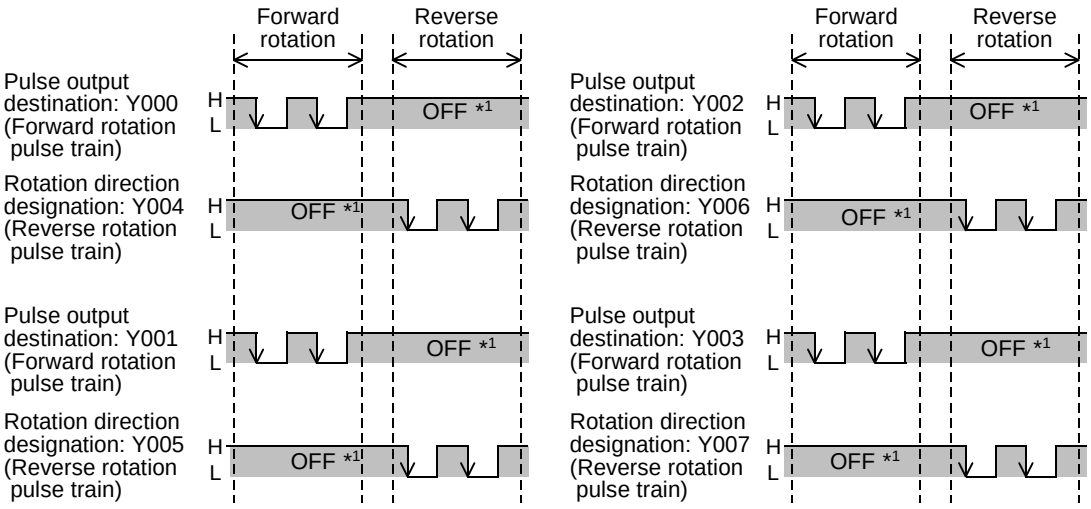

*1. "ON" and "OFF" represent the statuses of the PLC output. "H" and "L" respectively represent the HIGH status and the LOW status of the waveform.

→ **For details on the relation between high-speed output special adapter output and the waveform, refer to the next page.**

Reference: Image of PLC output and waveform (for MELSERVO-J3 Series servo amplifier)

1) Base unit (transistor output (sink output))

a) Connection of PLC to servo amplifier

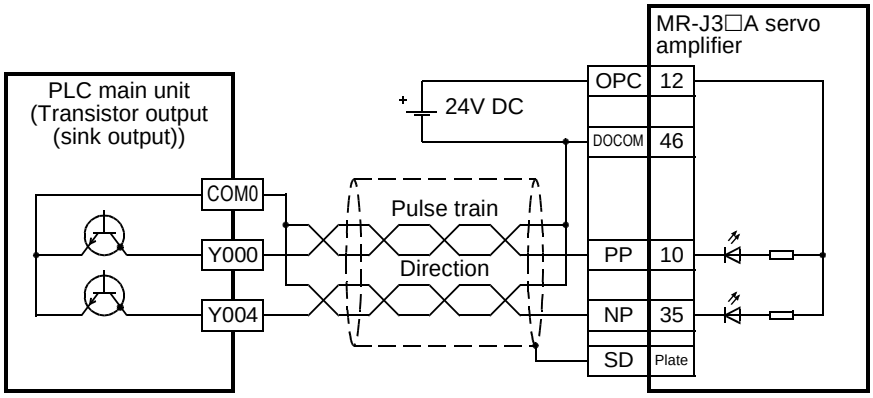

b) Image of PLC output and output waveform

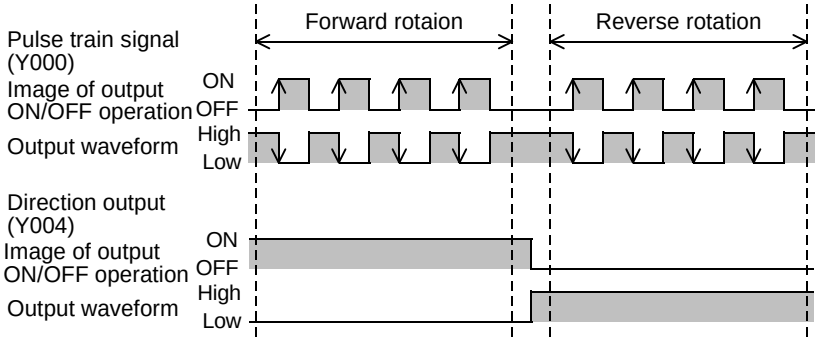

2) High-speed output special adapter (set to "pulse train + direction")

a) Connection of PLC to servo amplifier

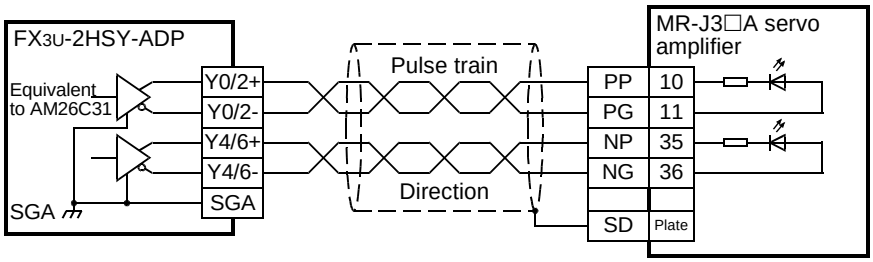

b) Image of PLC output and output waveform

The output waveform shown below is based on the SGA terminal of high-speed output special adapter. If the SGB side of high-speed output special adapter is used, the output waveform will be that of the SGB terminal.

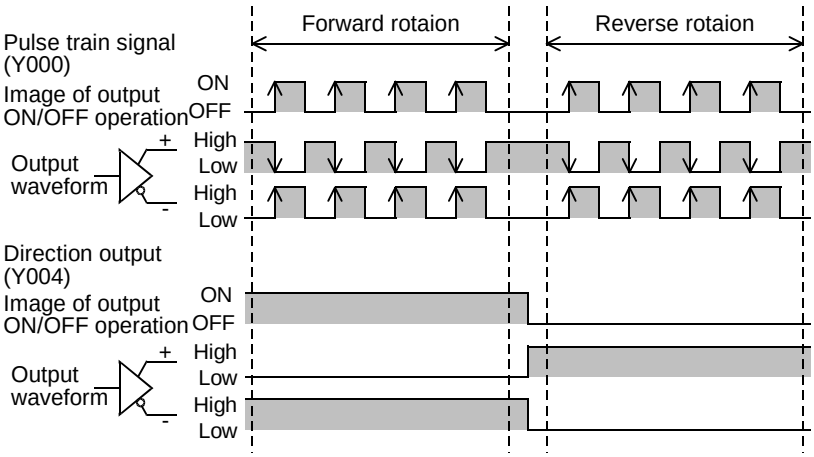

3) High-speed output special adapter (set to "forward/reverse rotation pulse TRAIN")

a) Connection of PLC to servo amplifier

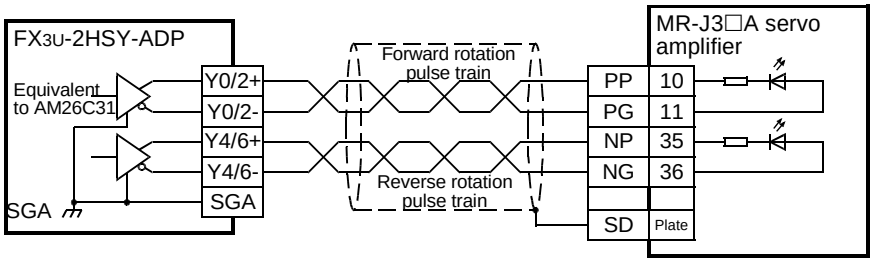

b) Image of PLC output and output waveform

The output waveform shown below is based on the SGA terminal of high-speed output special adapter. If the SGB side of the high-speed output special adapter is used, the output waveform will be that of the SGB terminal.

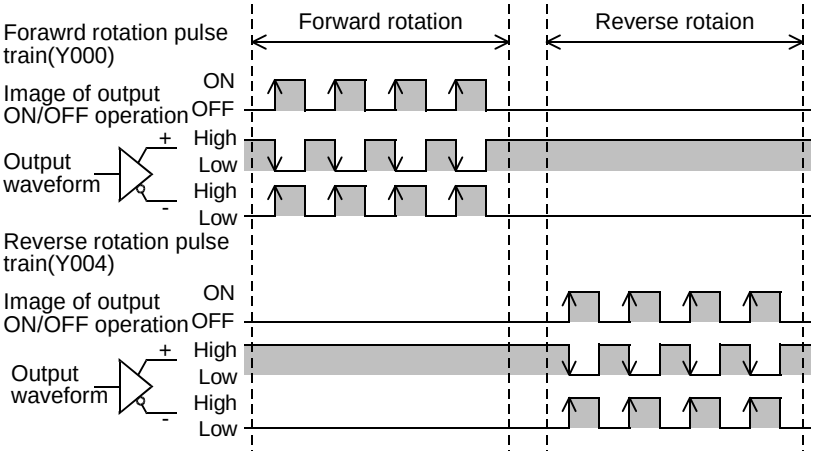

2. Setting of command pulse input method for servo amplifier (drive unit)

Set the following parameter of the servo amplifier (drive unit) so that the pulse train input method of the servo amplifier (drive unit) can be adjusted to the pulse output method of the PLC as shown in the following tables.

Servo amplifier (drive unit)	Pulse output method of main unit	Pulse output method of high-speed output special adapter	
	Transistor output (sink output)	Differential line driver	
	Pulse train + direction	Pulse train + direction	Forward rotation pulse train, reverse rotation pulse train
Command pulse input method	"Pulse train + sign"	"Pulse train + sign"	Forward rotation pulse train, reverse rotation pulse train
Logic of command pulse	"Negative logic"	"Negative logic"	"Negative logic"

Parameter setting for each series of MELSERVO servo amplifier:

Series	Parameter No.	Set value	
		Pulse train + direction Negative logic	forward/reverse rotation pulse train Negative logic
MR-J3	13	0011	0010
MR-J2,MR-J2S	21	0011	0010
MR-C	7	011	010
MR-H	21	011□*1	010□*1
MR-J	7	□□□1*1	□□□0*1

*1. □ is for the setting except command pluse output form.

→ **For details, refer to Servo amplifier manual.**

4.6.2 Setting of Electronic Gear (For MELSERVO Series)

Use the electronic gear of the servo motor to set the transfer distance per pulse.
For details on electronic gear setting, refer to the manual of your servo motor or servo amplifier, and set the optimum value considering the application.

Setting example 1:

To set the transfer distance per pulse to 10 μm (if the machine uses a ball screw):

Machine specifications

Servo amplifier	MR-C Series
Rated rotational speed of servo motor	3000r/min
Lead of ball screw (Pb)	10mm (0.4")
Reduction ratio (mechanical gear) (n)	1/2
Resolution of servo motor (Pt)	4000pls/rev

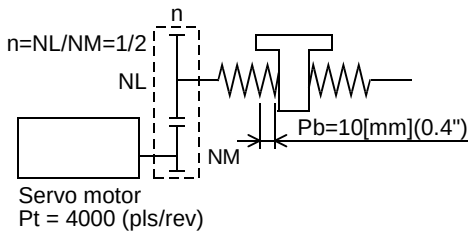

$$\frac{CMX}{CDV} = \triangle\ell 0 \times \frac{Pt}{n \times Pb} = 10 \times 10^{-3} \times \frac{4000}{1/2 \times 10} = \frac{8}{1}$$

f0 : Command pulse frequency [Hz] (Open collector system)
CMX : Electronic gear (numerator of command pulse multiplying factor)
CDV : Electronic gear (denominator of command pulse multiplying factor)
N0 : Servo motor rotational speed [r/min]
$\triangle\ell 0$: Transfer distance per pulse [mm]

Set the electronic gear as follows:
CMX = 8, CDV = 1
In this case, when the main unit outputs the maximum output pulse frequency (100 kHz), the servo motor rotational speed will be as follows:

$$N0 = \frac{CMX}{CDV} \times \frac{60}{Pt} \times f0$$

$$= \frac{8}{1} \times \frac{60}{4000} \times 100000$$

= 12000r/min > 3000r/min (Rated rotational speed of servo motor)

It is not necessary to restrict the maximum speed on the PLC side because the servo motor rotational speed is less than the rated rotational speed.

Pulse output destination device	Maximum speed setting device
Y000	D8344,D8343
Y001	D8354,D8353
Y002	D8364,D8363
Y003*1	D8374,D8373

*1. Devices related to Y003 (pulse output destination) are valid only if two FX3U-2HSY-ADP adapters are connected to the FX3U PLC.

Setting example 2:

To set the transfer distance per pulse to 0.01° (if a turntable is used):

Machine specifications

Servo amplifier	MR-J2S Series
Rated rotational speed of servo motor	3000r/min
Turntable	360°/rev
Reduction ratio (mechanical gear) (n) (Timing belt)	8/64
Resolution of servo motor (Pt)	131072pls/rev

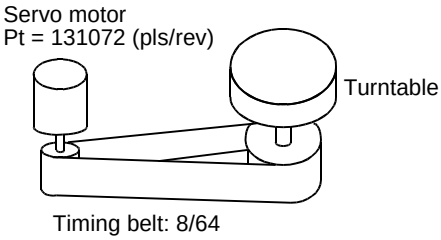

$$\frac{CMX}{CDV} = \triangle\ell_0 \times \frac{Pt}{n \times 360} = 1 \times 10^{-2} \times \frac{131072}{8/64 \times 360} = \frac{32768}{1125}$$

f0 : Command pulse frequency [Hz] (open collector system)
CMX : Electronic gear (numerator of command pulse multiplying factor)
CDV : Electronic gear (denominator of command pulse multiplying factor)
N0 : Servo motor rotational speed [r/min]
$\triangle\ell_0$: Transfer distance per pulse [°]

Set the electronic gear as follows:
CMX = 32768, CDV = 1125
In this case, when the main unit outputs the maximum output pulse frequency (100 kHz), the servo motor rotational speed will be as follows:

$$N_0 = \frac{CMX}{CDV} \times \frac{60}{Pt} \times f_0$$

$$= \frac{32768}{1125} \times \frac{60}{131072} \times 100000$$

≒ 1333.33 ••• r/min < 3000r/min (Rated rotational speed)

It is not necessary to restrict the maximum speed on the PLC side because the servo motor rotational speed is less than the rated rotational speed.

4.6.3 Setting of "Servo Ready" Signal (MELSERVO MR-C Series)

If the following parameter is set as shown in the following table for the MELSERVO MR-C Series, pin 3 of the CN1 connector of the servo amplifier will be changed to "servo ready" (RD). Note that the following parameter should be set for the examples of programs shown in Chapter 12.

Series	Parameter No.	Setting value
MR-C	21	020

4.7 Items To Be Observed in Programming

This section describes various programming items that will not be affected by any pulse output destination devices (hardware).
In other sections, the programming items that will be affected by the pulse output destination devices are described. Also refer to these sections.

→ **To use the transistor output of the main unit, also refer to Section 4.8.**
→ **To use the high-speed output special adapter, also refer to Section 4.9.**

4.7.1 Positioning Instruction Activation Timing

The following positioning instruction can be programmed as much as needed. However, observe the items shown in the following table to determine the instruction activation timing.

		Description	Instruction to be used							
			DSZR	DVIT	TBL	ABS	ZRN	PLSV	DRVI	DRVA
Instruction to be used	DSZR(FNC150)	Zero return instruction with DOG search function	✓	✓	✓	△	✓	✓	✓	✓
	DVIT(FNC151)	Interrupt Positioning (interruption fixed-feed)	✓	✓	✓	△	✓	✓	✓	✓
	TBL(FNC152)	Positioning by batch setting method	✓	✓	✓	△	✓	✓	✓	✓
	ABS(FNC155)	Current ABS value read-out from servo amplifier*1	△	△	△	△	△	△	△	△
	ZRN(FNC156)	Zero returnzero return (without DOG search function)	✓	✓	✓	△	✓	✓	✓	✓
	PLSV(FNC157)	Variable speed Pulse Output	✓	✓	✓	△	✓	✓	✓	✓
	DRVI(FNC158)	Drive to Increment	✓	✓	✓	△	✓	✓	✓	✓
	DRVA(FNC159)	Drive to Absolute	✓	✓	✓	△	✓	✓	✓	✓

✓: If the pulse output destination device is now outputting pulses, the instruction cannot be activated. Refer to "Note" below.

△: For absolute position detection system, activate ABS (FNC155) instruction at turning-on the servo amplifier at power-on. After execution of this instruction, the current value will be read out from the servo amplifier*1 only once.
Turning off this instruction will turn off the servo amplifier*1.

*1. ABS (FNC155) instruction can be used for absolute position detection system of the MELSERVO-J3, -J2(S), and -H Series.

Caution:

If "pulse output monitor" (BUSY/READY) flag is on, and if the positioning instruction (excluding the ABS instruction) or the pulse output instruction (PLSR, PLSY) uses the same pulse output destination device, the instruction cannot be executed.
Even after turning off of the instruction activation contact, if "pulse output monitor" (BUSY/READY) flag is still on, do not execute the positioning instruction (including PLSR and PLSY instructions) for the same output number.
Before activating such an instruction, check that "pulse output monitor" (BUSY/READY) flag is off, and then wait until 1 cycle or more of operation has been completed.

→ **For examples of programs, refer to Chapter 12.**

Pulse output destination device	"Pulse output monitor" flag
Y000	M8340
Y001	M8350
Y002	M8360
Y003*1	M8370

*1. Y003 can be specified as the pulse output destination only if two FX3U-2HSY-ADP adapters are connected to the FX3U PLC.

Use with PLSY (FNC57) and PLSR (FNC59) instructions:

In addition to the later-described positioning instructions, there are other instructions that need outputting of pulses. They are pulse output instructions FNC57 (PLSY) and FNC59 (PLSR).

- Do not use the same output number for both the positioning instruction (FNC150 - FNC159) and the pulse output instruction (FNC57 or FNC59).
- Use of a positioning instruction together with PLSY or PLSR instruction will complicate the operation of the register that controls the number of output pulses (see the following table). For this reason, it is recommended that a positioning instruction should be used in place of PLSY or PLSR instruction.

→ **For details on the related devices, refer to Section 4.1 to Section 4.4.**

Pulse output destination device	Current value register	
	For FNC150 - FNC159 instructions	For FNC57 and FNC59 instructions
Y000	D8341,D8340	D8141,D8140
Y001	D8351,D8350	D8143,D8142
Y002	D8361,D8360	-
Y003*1	D8371,D8370	-

*1. Y003 can be specified as the pulse output destination only if two FX3U-2HSY-ADP adapters are connected to the FX3U PLC.

- If it is necessary to use a positioning instruction (FNC150 to FNC159) together with a pulse output instruction (FNC57 or FNC59), use the following positioning instruction in place of the pulse output instruction:
  - FNC57(PLSY), FNC59(PLSR)→FNC158(DRVI)

4.7.2 STOP instruction

For the normal stop of operation (stop after speed reduction), use "instruction OFF" function or "forward/reverse limit flag".
If immediate stop is absolutely needed to avoid danger, use the pulse output stop command flag.
During execution of positioning instruction, however, if the pulse output stop command flag is turned on, the pulse outputting operation will be immediately stopped. This means that the motor will be immediately stopped, which may damage the system. For this reason, carefully use the pulse output stop command flag.

Pulse output destination device	Pulse stop instruction	Operation
Y000	M8349	During pulse outputting operation, if the pulse output stop command flag of the corresponding pulse output destination device is turned on, the pulse outputting operation will be immediately stopped.
Y001	M8359	
Y002	M8369	
Y003*1	M8379	

*1. Y003 can be specified as the pulse output destination only if 2 high-speed output special adapters are connected to the FX3U PLC.

4.7.3 Correction of Backlash

The Built-in positioning function cannot correct the mechanical backlash (clearance, play). If it is necessary to correct the backlash, preliminarily set the number of output pulses considering the backlash that may be caused while reversing the transfer direction.

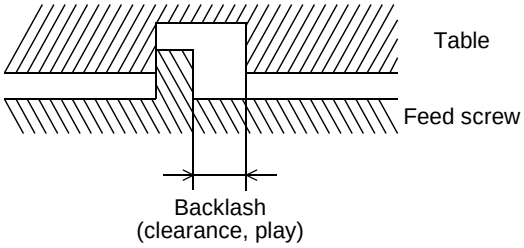

4.7.4 "Instruction execution complete" Flag of Positioning Instruction and Completion of Positioning

If the Instruction execution complete flag (M8029) or the Instruction execution abnormal end flag (M8329) is turned on, judge that execution of the instruction (pulse outputting operation, etc.) is completed. In this case, however, it is not certain whether the servo motor is stopped. Check "positioning completion" signal or "servo ready" signal of the servo amplifier (drive unit) to check whether the servo motor is stopped.
→ **For details on "Instruction execution complete" flag and "Instruction execution abnormal end" flag, refer to Subsection 4.4.2.**

Programming using "Instruction execution complete" flag and "Instruction execution abnormal end" flag:

1) If two or more positioning instructions are used in a program, "Instruction execution complete" flag (M8029) or "Instruction execution abnormal end" flag (M8329) will be turned on or off after execution of each instruction. However, if "Instruction execution complete" flag (M8029) and "Instruction execution abnormal end" flag are used together for a program, it is difficult to determine which instruction turns them ON/OFF and "Instruction execution complete" flag will not be turned on for the intended instruction.
   → **To use a positioning instruction at a position other than just below the instruction, refer to the example shown on the next page.**

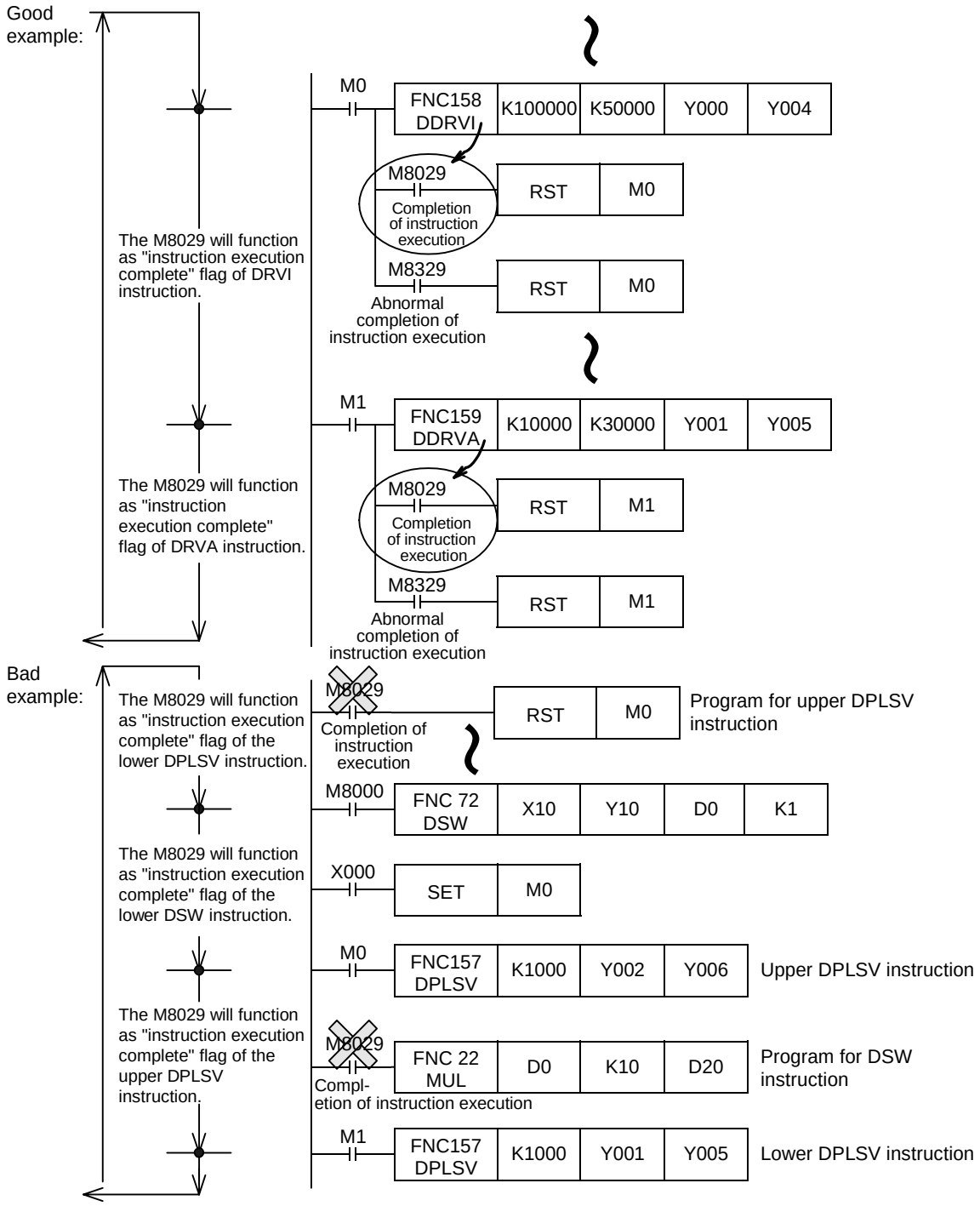

2) To use at a position other than just below the positioning instruction:
If two or more positioning instructions are used in a program, "Instruction execution complete" flag (M8029) or "Instruction execution abnormal end" flag (M8329) will be turned on or off after execution of each instruction.
If it is necessary to use "Instruction execution complete" flag or "Instruction execution abnormal end" flag at a point other than just below the instruction, turn on or off the other bit device just below the instruction, and use the contact as the command contact.

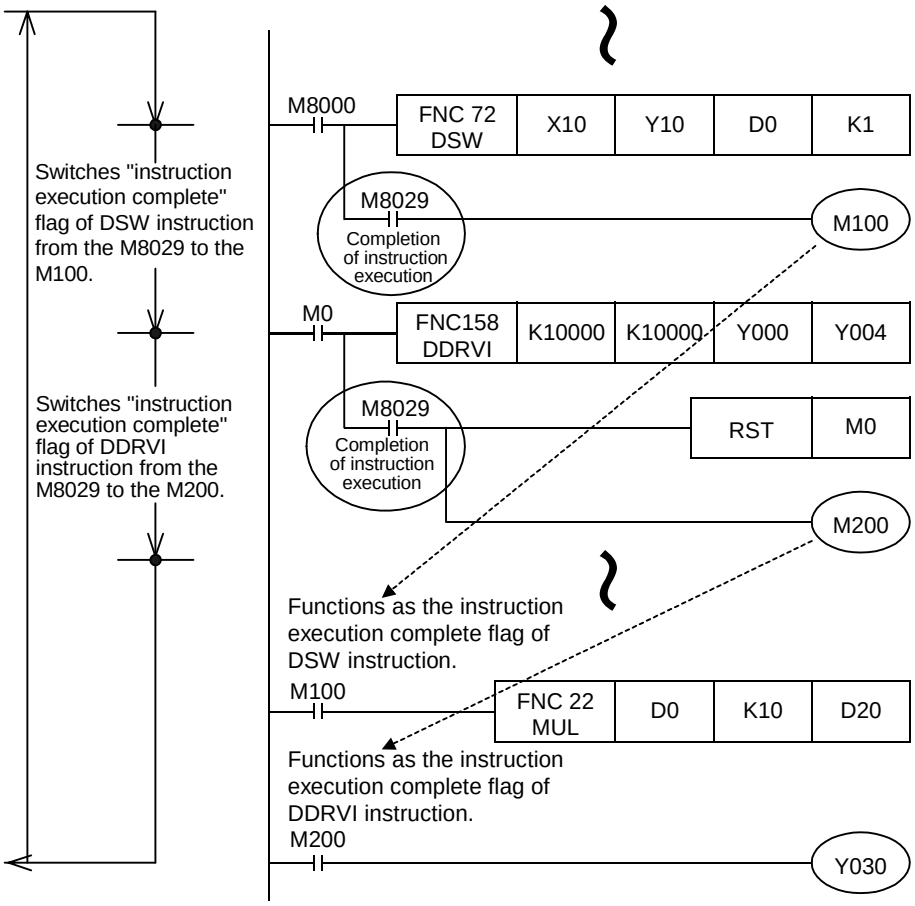

4.7.5 Operation Error Flag

If an applied instruction (including positioning instructions) of the FX3U/FX3UC PLC has an error (construction error, device designation error, numbering range error, etc.), an operation error may occur during operation. If an operation error occurs, the following flag will be turned on, and the error data will be stored.

1. Operation error

Error flag	Error code storage device	Error detected step number storage device (32-bit)
M8067	D8067	D8315,D8314

- If an operation error occurs, the M8067 will be turned on, and the operation error code will be stored in the D8067, and the error detected step number*1 will be stored in the D8315 and D8314 (32-bit).

  *1.If the error detected step number is 32767 or less, the error step number can be also checked using the D8069 (16-bit).
- If an operation error occurs at the other step, the error code and the error step number of the instruction will be sequentially updated. (If the error status is canceled, the error flag will be turned off.)
- If the PLC once stopped is restarted without canceling the error status, the error status will be automatically canceled, but immediately after that, the error flag will be turned on again.

2. Operation error latch

Error flag	Error code storage device	Error detected step number storage device (32-bit)
M8068	-	D8313,D8312

- If an operation error occurs, the M8068 will be turned on, and the error detected step number*1 will be stored in the D8313 and D8312.

  *1.If the operation error detected step number is 32767 or less, the error step number can be also checked using the D8068 (16-bit).
- If a new error is caused by the other instruction, the error data will not be updated, and the operation will be continued until "forced reset" command is input or the power is turned off.

4.7.6 Write during RUN

Do not change program if a positioning instruction (FNC150, FNC151, FNC156 to FNC159) is being executed (pulses are being output) in the RUN mode. Operations will be performed as shown in the following table if program is change during execution of instruction in RUN mode.

Instruction		If program is change in circuit block including currently-activated instruction
DSZR(FNC150)		Decelerates and stops pulse output.
DVIT(FNC151)		
TBL(FNC152)		Program cannot be change in the RUN mode.
ZRN(FNC156)		Decelerates and stops pulse output.
PLSV (FNC157)	During operation with acceleration/deceleration*1	Decelerates and stops pulse output.
	During operation without acceleration/deceleration	Immediately stops pulse output.
DRVI(FNC158) DRVA(FNC159)		Decelerates and stops pulse output.

*1. This instruction is compatible with Ver.2.00 or later.
If the FX3UC PLC is used and its version is below Ver.2.00, operation will be performed without acceleration/deceleration.

4.8 Items To Be Observed in Use of Main Unit (Transistor Output)

1. Pulse output destination devices

Use Y000, Y001, and Y002 transistor outputs of the main unit as the pulse output destination devices.
Do not use Y003 transistor output of the main unit for the positioning instructions. If Y003 is used for a positioning instruction, the PLC may be damaged.

2. Pulse output method

Adjust the pulse output method of the transistor output of the main unit so that the pulse output method can conform to the command pulse input method of the servo amplifier (drive unit).
If the pulse output method is not properly adjusted, the servo amplifier (drive unit) may not perform the intended operation.

→ **For details on the servo amplifier (drive unit), refer to the manual of the product used in your system.**
→ **For details on the pulse output method of the main unit, refer to Subsection 4.6.1.**

3. Output pulse frequency (including zero return speed)

If the transistor output Y000, Y001, Y002 of main unit uses the pulse frequency of more than 100,000 Hz to perform operation, the PLC may be damaged.
The output pulse frequency and the zero return speed should be equal to or less than the maximum frequency of the servo amplifier (drive unit).

4. Load current

To use a positioning instruction for Y000, Y001, or Y002 transistor output of the main unit, adjust the load current of the open collector transistor output to 10 to 100 mA (5 to 24V DC).

Item	Description
Operation voltage range	5 to 24V DC
Operation current range	10 to 100mA
Output pulse frequency	100 kHz or less

4.9 Caution for Using the High-Speed Output Special Adapter (FX3U-2HSY-ADP)

1. Output terminals to be used

If the high-speed output special adapter is connected, output numbers will be assigned in the same way as the main unit as shown in the following table. Use the output terminals of one side (main unit side or high-speed output special adapter side), and do not connect lines to the output terminals of unused side.
The outputs of high-speed output special adapter and the main unit will operate as follows.

Assignment of output numbers

Position of pulse output method setting switch of high-speed output special adapter	Signal	Name of positioning instruction	Output number			
			The 1st adapter		The 2nd adapter	
			1st axis	2nd axis	3rd axis	4th axis
FP·RP side	Forward rotation pulse train (FP)	Pulse output destination	Y000	Y001	Y002	Y003
	Reverse rotation pulse train (RP)	Rotation direction signal	Y004	Y005	Y006	Y007
PLS·DIR side	Pulse train	Pulse output destination	Y000	Y001	Y002	Y003
	Direction	Rotation direction signal	Y004	Y005	Y006	Y007

Operation of output

	Operation of output	
	Instruction for outputting pulse train at high speed	**Other instructions**
Main unit of relay output type	If the instruction turns ON, the corresponding output will be turned on (the corresponding LED will be turned on).	Can be activated.
High-speed output special adapter	Can be activated.	Can be activated.

- If an output number of the high-speed output special adapter is used (if an output of high-speed output special adapter is connected), do not use (connect) the corresponding output terminal of the main unit.
- If an output number of the main unit is used (if an output of the main unit is connected), do not use (connect) the corresponding output terminal of the high-speed output special adapter.

2. Rotation direction signal of positioning instruction

If FX3U-2HSY-ADP high-speed output special adapter is used, the rotational direction signal will be assigned to each pulse output destination device as shown in the following table. Do not assign any other outputs to these devices using positioning instructions, etc.

→ **For details, refer to Subsection 4.5.2.**

Pulse output destination device	Rotation direction signal (reverse rotation pulse train / direction)				Initial setting of CLEAR signal
	The 1st adapter		The 2nd adapter		
	1st axis	2nd axis	3rd axis	4th axis	
Y000	Y004	-	-	-	Y004
Y001	-	Y005	-	-	Y005
Y002	-	-	Y006	-	Y006
Y003	-	-	-	Y007	Y007

3. CLEAR signal and rotation direction signal

If FX3U-2HSY-ADP high-speed output special adapter is used, the same outputs will be used for both the CLEAR signal and rotation direction signal of DSZR (FNC150) or ZRN (FNC156) instruction as shown in the table above.
For this reason, to output the CLEAR signal, change the CLEAR signal device.

→ **For details on the CLEAR signal device change method, refer to Subsection 4.3.4.**

4. Pulse output method for high-speed output special adapter

Adjust the pulse output method of the high-speed output special adapter (FX3U-2HSY-ADP) so that the pulse output method can conform to the command pulse input method of the servo amplifier (drive unit).
If the pulse output method is not properly adjusted, the servo amplifier (drive unit) may not perform the intended operation.

→ **For details on the servo amplifier (drive unit), refer to the manual of the product to be used for your system.**
→ **For details on the pulse output method, refer to Subsection 4.6.1 or Subsection 4.5.2.**

5. Output pulse frequency (including zero return speed)

Set the output pulse frequency and the zero return speed so that these values can be less than the maximum frequency value of the servo amplifier (driver unit).

4.10 Format and Execution of Applied Instruction

Instruction and operand:

- Function numbers (FNC00 - FNC□□□) and symbols (mnemonic codes) are assigned to the applied instructions of this PLC. For example, a symbol of "SMOV" (shift) is assigned to the FNC13.
- Some applied instructions consist of the instruction area only, but many applied instructions consist of the instruction area and the operand.

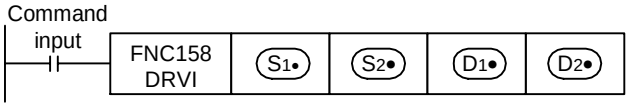

(S) : An operand that will not be affected by execution of the instruction is referred to as a source. This symbol represents a source.
If the device number is modified by the index register, "•" will be added, and S will be modified into (S•). If there are two or more sources, the modified sources will be (S1•), (S2•), and so on.

(D) : An operand that will be affected by execution of the instruction is referred to as a destination. This symbol represents a destination.
If the device numbers can be indexed by index registers, and if there are two or more destinations, the modified destinations will be (D1•), (D2•), and so on.

m, n : The operands not corresponding to source and distination are indicated as "m" and "n".
If the device number can be indexed by index registers, and if there are two or more operands, the modified operands will be m1·, m2·, n1·, n2·, and so on.

- Regarding the program steps, the instruction area of each applied instruction has 1 step. The operand of each applied instruction, however, has 2 or 4 steps depending on the number of bits (16 or 32 bits).

Devices for operands:

- Bit devices X, Y, M, and S can be used for the operands.
- Combination of these bit devices, such as KnX, KnY, KnM, and KnS, can be used for numeric data.
  → **Refer to the programming manual.**
- Current value registers, such as data register D, timer T, and counter C, can be used.
- Data register D consists of 16 bit. Consecutive 2 data registers (2 points), therefore, should be used for the 32-bit data.
  For example, if data register D0 is specified for the operand of a 32-bit instruction, the D1 and D0 will be used for the 32-bit data (D1 for 16 high-order bits, and D0 for 16 low-order bits).
  If current value registers T and C are used as the general data registers, they will be used in the same way.
  Each 32-bit counter (C200 to C255), however, can use the 32-bit data without combining two counters. These counters, however, cannot be specified for the operands of 16-bit instructions.

Format and execution of instruction:

Depending on the sizes of the numeric values to be processed, applied instructions can be classified into two types: 16-bit instructions and 32-bit instructions. In addition, depending on the execution type, these instructions can be also classified into two types: continuous execution type and the pulse execution type. Regarding applied instructions, some of them have all the combinations and others do not.

1. 16-bit instructions and 32-bit instructions

- Depending on the bit length of the numeric data to be processed, applied instructions can be classified into two types: 16-bit type and the 32-bit type.

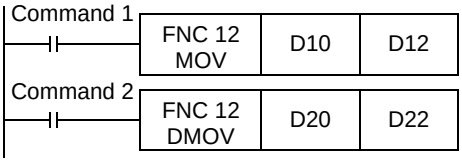

the D10 to the D12.

This instruction transfers the data from the D21 and D20 to the D23 and D22.

- For the 32-bit instruction, the instruction name will be DMOV ("D" will be added to "MOV").
- Either the even number devices or the odd number devices can be specified. If a device is specified, the specified device will be combined with the device having the next number (for the word devices, such as devices T, C, and D).
  To prevent confusion, it is recommended that the operand of a 32-bit instruction should use even numbers to specify the low-order devices.
- Each 32-bit counter (C200 to C255) needs only one device to set 32 bits. For this reason, the operand of a 16-bit instruction cannot specify any 32-bit counters.

2. Pulse execution type instructions and continuous execution type instructions

Pulse execution type instructions:

The program shown in the right figure shows that when X000 is turned on, the instruction will be executed only once. If X000 is off, the instruction will not be executed. If it is not necessary to frequently execute the instruction, use of the pulse execution type instructions is recommended. Note that "P" means that the instruction is the pulse execution type. This means that DMOVP is also the pulse execution type.

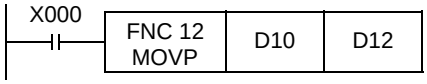

Continuous execution type instructions:

The program shown in the right figure shows that if X001 is on, the continuous execution type instruction will be executed at the start of each operation cycle.

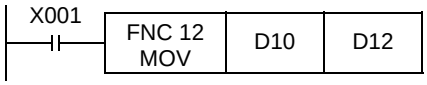

Note that if the FNC24 (INC) or FNC25 (DEC) is used as the continuous execution type instruction, the destination will be changed at the start of each operation cycle.

To indicate such continuous execution type instructions, the symbol " ◥ " will be added to the title of each instruction as shown in the following figure. Carefully use these instructions.

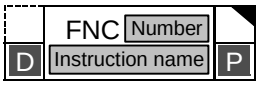

Note that if activation input X000 or X001 is off, instructions will not be executed. Also note that if the later symbol is not added to the title of an instruction, the destination of the instruction will not be changed.

5. Operation Test

This chapter describes the operation test of positioning instructions. During forward rotation (JOG+) operation and reverse rotation (JOG-) operation, the test checks whether positioning instructions are properly activated.

DESIGN PRECAUTIONS **DANGER**

- Provide a safety circuit on the outside of the PLC so that the whole system operates to ensure the safety even when external power supply trouble or PLC failure occurs.
  Otherwise, malfunctions or output failures may result in an accident.
  1) An emergency stop circuit, a protection circuit, an interlock circuit for opposite movements, such as normal and reverse rotations, and an interlock circuit for preventing damage to the machine at the upper and lower positioning limits should be configured on the outside of the PLC.
  2) When the PLC CPU detects an error, such as a watch dog timer error, during self-diagnosis, all outputs are turned off. When an error that cannot be detected by the PLC CPU occurs in an input/output control block, output control may be disabled.
     Design external circuits and mechanisms to ensure safe operations of the machine in such a case.
  3) When some sort of error occurs in a relay, triac or transistor of the output unit, output may be kept on or off.
     For output signals that may lead to serious accidents, design external circuits and mechanisms to ensure safe operations of the machine in such cases.

DESIGN PRECAUTIONS **CAUTION**

- Do not bundle the control line together with the main circuit or power line. Do not lay the control line near them.As a rule, lay the control line at least 100mm(3.94") or more away from the main circuit or power line.
  Noise may cause malfunctions.
- Install in a manner which prevents excessive force from being applied to the built-in connectors dedicated to programming, power connectors and I/O connectors.
  Failure to do so may result in wire breakage or failure of the PLC.

WIRING PRECAUTIONS **DANGER**

- Cut off all phases of the power source externally before installation or wiring work in order to avoid electric shock or damage of product.
- Make sure to attach the terminal cover offered as an accessory to the product before turning on the power or starting the operation after installation or wiring work.
  Failure to do so may cause electric shock.

WIRING PRECAUTIONS **CAUTION**

- Connect the AC power supply wiring to the dedicated terminals described in this manual.
  If an AC power supply is connected to a DC input/output terminal or DC power supply terminal, the PLC will be burnt out.
- Connect the DC power supply wiring to the dedicated terminals described in this manual.
  If an AC power supply is connected to a DC input/output terminal or DC power supply terminal, the PLC will be burnt out.
- Do not wire vacant terminals externally.
  Doing so may damage the product.
- Perform class D grounding (grounding resistance: 100Ω or less) to the grounding terminal in the FX3U Series main unit with a 2mm2 or thicker wire.
  Do not connect the grounding terminal at the same point as a heavy electrical system (refer to the manual of the PLC main unit).

WIRING PRECAUTIONS **CAUTION**

- Perform class D grounding (grounding resistance: 100Ω or less) to the grounding terminal in the FX3UC Series main unit with a wire as thick as possible.
  Do not connect the grounding terminal at the same point as a heavy electrical system (refer to the manual of the PLC main unit).
- When drilling screw holes or wiring, cutting chips or wire chips should not enter ventilation slits. such an accident may cause fire, failures or malfunctions.
- Use the product in such a status that excessive force is not applied on I/O connectors.
  Failure to do so may result in wire breakage or failure of the PLC.
- Fit the I/O cables securely to the designated connectors.
  Contact failures may cause malfunctions.
- Perform wiring properly to the FX3U Series main unit and FX0N/FX2N Series extension equipment of the terminal block type in accordance with the following precautions.
  Failure to do so may cause electric shock, short-circuit, wire breakage, or damages to the product.
  - The disposal size of the cable end should follow the dimensions described in this manual.
  - Tightening torque should be between 0.5 to 0.8 N•m.
- Observe the following items to wire the lines to the European terminal board. Ignorance of the following items may cause electric shock, short circuit, disconnection, or damage of the product.
  - The disposal size of the cable end should follow the dimensions described in this manual.
  - Tightening torque should be between 0.22 to 0.25 N•m.
  - Twist the end of strand wire and make sure there is no loose wires.
  - Do not solder-plate the electric wire ends.
  - Do not connect electric wires of unspecified size or beyond the specified number of electric wires.
  - Fix the electric wires so that the terminal block and connected parts of electric wires are not directly stressed.
- Properly perform wiring to the FX Series terminal blocks following the precautions below in order to prevent electrical shock, short-circuit, breakage of wire, or damage to the product:
  - The disposal size of the cable end should follow the dimensions described in this manual.
  - Tightening torque should be between 0.5 to 0.8 N•m.

STARTUP AND MAINTENANCE PRECAUTIONS **DANGER**

- Do not touch any terminal while the PLC's power is on.
  Doing so may cause electrical shock or malfunctions.
- Before cleaning or retightening terminals, externally cut off all phases of the power supply.
  Failure to do so may expose you to shock hazard.
- Before modifying the program under operation or performing operation for forcible output, running or stopping, carefully read the manual, and sufficiently ensure the safety.
  An operation error may damage the machine or cause accidents.

STARTUP AND MAINTENANCE PRECAUTIONS **CAUTION**

- Do not disassemble or modify the PLC.
  Doing so may cause failures, malfunctions or fire.
  For repair, contact your local Mitsubishi Electric distributor.
- Before connecting or disconnecting any extension cable, turn off power.
  Failure to do so may cause unit failure or malfunctions.
- Before attaching or detaching the following devices, turn off power.
  Failure to do so may cause device failure or malfunctions.
  - Peripheral devices, expansion boards and special adapters
  - I/O extension units/blocks and terminal blocks

5.1 Test Procedure

1 Turn off the power to the PLC.

2 Temporarily connect the limit switches (forward rotation limit 1, reversed rotation limit 1) and the manual switches (forward rotation, reverse rotation).

Connect the limit switches and the manual switches to the following input terminals of the PLC.
Do not connect the servo amplifier (drive unit).

→ **For details on connection, refer to Chapter 3 of the Hardware Edition of the PLC.**
→ **For details on the forward rotation limit and the reverse rotation limit, refer to Subsection 4.3.1.**

Signal			Input number
Limit switch	Forward rotation limit 1	NC contact	X010
	Reverse rotation limit 1	NC contact	X011
Manual switch	Forward rotation (JOG+)	NO contact	X012
	Reverse rotation (JOG-)	NO contact	X013

3 Create the test program.

→ **For details on the test program, refer to Section 5.2.**

4 Turn on the power to the PLC.

5 Transfer the test program to the main unit.

→ **For details, refer to the manual of the programming tool.**

6 Check the input indicator lamp (LED lamp).

When the programming controller is stopped, activate the temporarily connected input terminals, and check the status of each input indicator lamp (LED lamp).
If the FX3UC PLC is used, check the input statuses using the display module.

Signal	Input signal	Status of LED indicator lamp
Forward rotation limit 1	X010	Activation of the forward rotation limit switch 1 will turn off the LED indicator lamp of X010 (turn off X010).
Reverse rotation limit 1	X011	Activation of the reverse rotation limit switch 1 will turn off the LED indicator lamp of X011 (turn off X011).
Forward rotation (JOG+)	X012	Turning on the forward rotation (JOG+) switch will turn on the LED indicator lamp of X012.
Reverse rotation (JOG-)	X013	Turning on the reverse rotation (JOG-) switch will turn on the LED indicator lamp of X013.

7 Switch the PLC into RUN mode.

8 Check the operation in the forward rotation direction.

Check the output indicator lamp (LED lamp) and the current value register to check the operation. The status of the LED indicator lamp and the value indicated on the current value register depend on the pulse output destination or rotation direction set in the positioning instruction. However, if the pulse output destination or the rotation direction is changed in the test program, carefully read the status of the output indicator lamp (LED lamp) and the value indicated on the current value register marking the change in the test program.

1. Operation in forward rotation direction

Turn on the forward rotation (JOG+) switch (X012), and check that operation is performed in the forward rotation direction. For this check, set the other inputs in the following statuses:

Input signal	Status
X010	ON
X011	ON
X013	OFF

1) LED indicator lamp check
Check the LED indicator lamps of the PLC or the display module to see whether or not the outputs are turned on. The status of each output should be as shown in the following table:

	Pulse output method	LED lamp of output	Status of LED lamp (output)
If transistor outputs of main unit are used	"Pulse train + direction" method	Y000	Turned on and off at a high speed.
		Y004	Kept at the ON status.
If high-speed output special adapter is used	"Pulse train + direction" method	Y0/2	Turned on and off at a high speed.
		Y4/6	Kept at the ON status.
	Forward rotation pulse train (FP) Reverse rotation pulse train (RP)	Y0/2	Turned on and off at a high speed.
		Y4/6	Kept at the OFF status.

2) Current value register (D8340, D8341) check
Monitor the current value register (D8340, D8341) of the FX3U/FX3UC PLC using the programming tool, and confirm that the value is being increased.
→ **For details on the current value register, refer to Subsection 4.4.1.**

2. Stop of operation

Turn off the forward rotation (JOG+) switch (X012) to stop the operation in the forward rotation direction.

1) LED indicator lamp check
Check the LED indicator lamps of the PLC or the display module to check whether the outputs are turned on. The status of each output should be as shown in the following table:

	Pulse output method	LED lamp of output	Status of LED lamp (output)
If transistor outputs of main unit are used	"Pulse train + direction" method	Y000	The LED indicator lamp turned on and off at a high speed will be turned off.
		Y004	Kept at the ON status.
If high-speed output special adapter is used	"Pulse train + direction" method	Y0/2	The LED indicator lamp turned on and off at a high speed will be turned off.
		Y4/6	Kept at the ON status.
	Forward rotation pulse train (FP) Reverse rotation pulse train (RP)	Y0/2	The LED indicator lamp turned on and off at a high speed will be turned off.
		Y4/6	Kept at the OFF status.

2) Current value register (D8340, D8341) check
Monitor the current value register (D8340, D8341) of the FX3U/FX3UC PLC using the programming tool, and confirm that increase in the value is stopped.
→ **For details on the current value register, refer to Subsection 4.4.1.**

9 Check the operation of the forward rotation limit switch.

During operation in the forward rotation direction (at step 8), turn off the forward rotation limit switch 1 (X010), and confirm that the operation in the forward rotation direction is stopped.

The LED indicator lamps and the current value register (D8340, D8341) will enter the same statuses as the stop statuses described in step 8.

In addition, "Instruction execution abnormal end" flag (M8329) will be turned on.

→ **For details on the current value register, refer to Subsection 4.4.1.**

10 Check the operation in the reverse rotation direction.

Check the output indicator lamp (LED lamp) and the current value register to check the operation. The status of the LED indicator lamp and the value indicated on the current value register depend on the pulse output destination or rotation direction set on the positioning instruction. However, if the pulse output destination or the rotation direction is changed in the test program, carefully read the status of the output indicator lamp (LED lamp) and the value indicated on the current value register considering on the change in the test program.

1. Operation in reverse rotation direction

Turn on the reverse rotation (JOG-) switch (X013), and check that the operation is performed in the reverse rotation direction.

Input signal	Status
X010	ON
X011	ON
X012	OFF

1) LED indicator lamp check
Check the LED indicator lamps of the PLC or the display module to check whether the outputs are turned on. The status of each output should be as shown in the following table:

	Pulse output method	LED lamp of output	Status of LED lamp (output)
If transistor outputs of main unit are used	"Pulse train + direction" method	Y000	Turned on and off at a high speed.
		Y004	Kept at the OFF status.
If high-speed output special adapter is used	"Pulse train + direction" method	Y0/2	Turned on and off at a high speed.
		Y4/6	Kept at the OFF status.
	Forward rotation pulse train (FP) Reverse rotation pulse train (RP)	Y0/2	Kept at the OFF status.
		Y4/6	Turned on and off at a high speed.

2) Current value register (D8340, D8341) check
Monitor the current value register (D8340, D8341) of the FX3U/FX3UC PLC using the programming tool, and confirm that the value is being reduced.

→ **For details on the current value register, refer to Subsection 4.4.1.**

2. Stop of operation

Turn off the reverse rotation (JOG-) switch (X013) to stop the operation in the reverse rotation direction.

1) LED indicator lamp check
Check the LED indicator lamps of the PLC or the display module to see whether or not the outputs are turned on. The status of each output should be as shown in the following table:

	Pulse output method	LED lamp of output	Status of LED lamp (output)
If transistor outputs of main unit are used	"Pulse train + direction" method	Y000	The LED indicator lamp turned on and off at a high speed will be turned off.
		Y004	Kept at the OFF status.
If high-speed output special adapter is used	"Pulse train + direction" method	Y0/2	The LED indicator lamp turned on and off at a high speed will be turned off.
		Y4/6	Kept at the OFF status.
	Forward rotation pulse train (FP) Reverse rotation pulse train (RP)	Y0/2	Kept at the OFF status.
		Y4/6	The LED indicator lamp turned on and off at a high speed will be turned off.

2) Current value register (D8340, D8341) check
Monitor the current value register (D8340, D8341) of the FX3U/FX3UC PLC using the programming tool, and confirm that decrease in the value is stopped.
→ **For details on the current value register, refer to Subsection 4.4.1.**

11 Check the operation of the reverse rotation limit switch.

During operation in the reverse rotation direction (at step 10), turn off the reverse rotation limit switch 1 (X011), and confirm that the operation in the reverse rotation direction is stopped.

The LED indicator lamps and the current value register (D8340, D8341) will enter the same statuses as the stop statuses described in step 10.

In addition, "Instruction execution abnormal end" flag (M8329) will be turned on.
→ **For details on the current value register, refer to Subsection 4.4.1.**

5.2 Creation of Test Program

1. Input/output assignment

Inputs/outputs are assigned as shown in the following table:

Signal			Input/output number
Limit switch	Forward rotation limit 1	NC contact	X010
	Reverse rotation limit 1	NC contact	X011
Manual switch	Forward rotation (JOG+)	NO contact	X012
	Reverse rotation (JOG-)	NO contact	X013
"Pulse train" signal or "forward rotation pulse train" signal (output specified for pulse output destination)			Y000
"Direction" signal or "reverse rotation pulse train" signal (output specified for rotation direction signal)			Y004

2. Setting of related devices

The related devices depend on the pulse output destination device set for the positioning instruction. If the pulse output destination device set for the positioning instruction is changed, it is necessary to change the related devices.

→ **For setting items of the related devices, refer to Subsection 4.5.1.**

Setting item	Description of setting	Related device	Setting value or condition	
Items related to speed				
Maximum speed	100,000Hz	D8344,D8343 (32-bit)	K100000	Initial value
Bias speed	0Hz	D8342	K0	Initial value
Acceleration time	100ms	D8348	K100	Initial value
Deceleration time	100ms	D8349	K100	Initial value
Forward/reverse rotation speed	30,000Hz	-	K30000	-
Forward limit, reverse limit, and immediate stop of pulse output				
Forward limit	If X010 is turned off (if the NC contact is turned on), the limit switch will be activated.	M8343	ON: If X010 = OFF	
Reverse limit	If X011 is turned off (if the NC contact is turned on), the limit switch will be activated.	M8344	ON: If X011 = OFF	
Status check items				
Positioning (Y000)	Use this device to check whether the positioning instruction is being activated.	M8348	Turns on when positioning instruction is activated.	
"Instruction execution abnormal end" flag	Use this device to check whether or not the forward/reverse rotation limit switch turns ON.	M8329	Turns on when the limit switch is activated during positioning operation.	
Current value register (Y000)	Stores the current value of the positioning operation in Y000.	D8340,D8241 (32-bit)	Varies when positioning instruction turns ON.	

3. Example of program

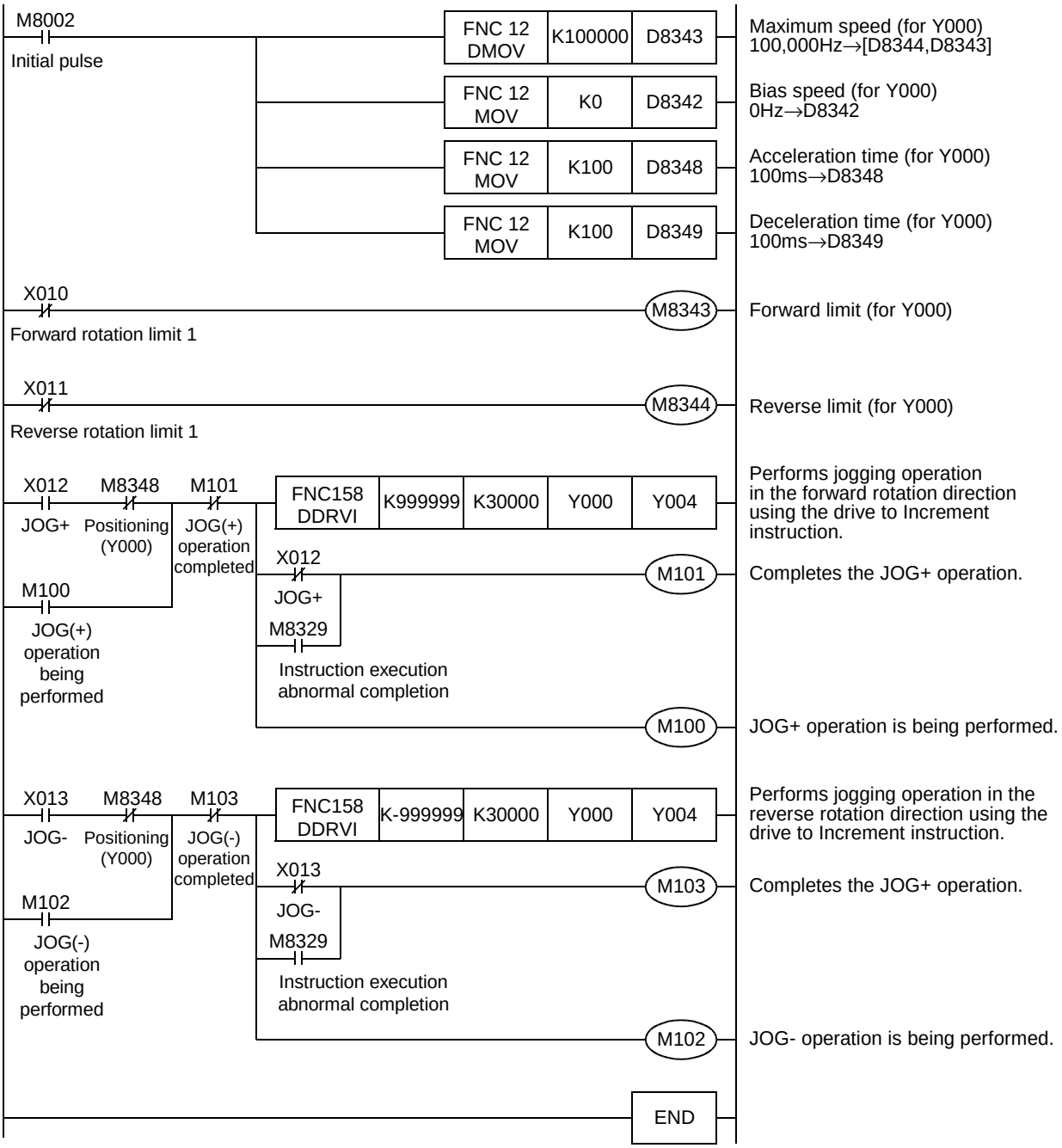

6. Mechanical Zero Return (DSZR/ZRN Instruction)

6.1 Types of Mechanical Zero Return Instructions

If the specified forward rotation pulse or the reverse rotation pulse is output, the positioning instruction of the PLC will increase or reduce the current value of the current value register.
When turning off the power of the PLC, however, the current value stored in the current value register will be erased. For this reason, after turning on the power again, be sure to adjust the current value of the current value register to the current position of the machine.
The Built-in positioning function will use DSZR/ZRN instruction (zero return instruction) to adjust the value of the current value register to the current mechanical position.
Compared with ZRN instruction, DSZR instruction has some more functions.

	DSZR instruction	ZRN instruction
DOG search function	✓	-
DOG signal logical NOT	✓	-
Zero return using zero-phase signal	✓	-
Zero point signal logic reverse	✓	-

Absolute position detection system:

If the MR-H, MR-J2, MR-J2S, or MR-J3 servo amplifier (with absolute position detection function) manufactured by Mitsubishi is used, the current position value will be retained even after power-off.
Perform zero return only once. After turning on the power again, just read out the current position value of the servo motor to the PLC by FNC155 (DABS) instruction. This means that it is not necessary to perform zero return just after power-on.

6.2 DOG Search Zero Return (DSZR Instruction)

Using the FX3U/FX3UC PLC of Ver.2.00 or later, use this instruction to change the CLEAR signal output destination.

6.2.1 Instruction Format

1. Instruction format

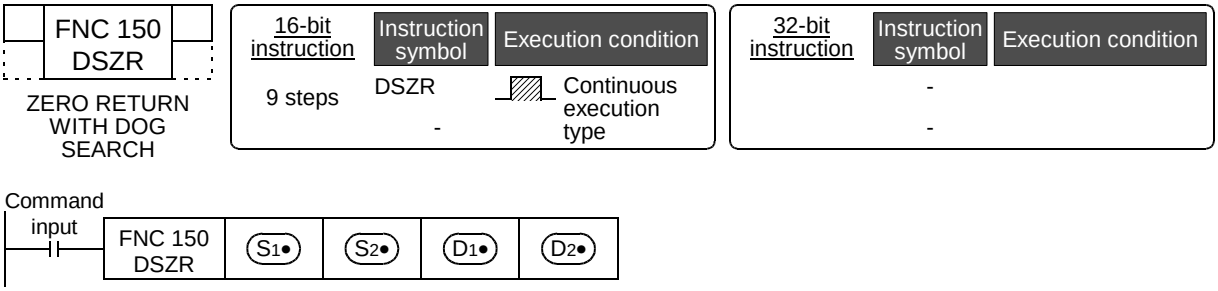

2. Data setting

Operand type	Description	Data type
S1•	Specifies the near-point signal (DOG) input device number.	bit
S2•	Specifies the zero-phase signal input number.	
D1•	Specifies the pulse output number.	
D2•	Specifies the rotation direction signal output destination number.	

3. Devices

Operand type	Bit device							Word device												Others				
	System user						Digit designation				System user				Special unit	Index			Constant		Real number	Character string	Pointer
	X	Y	M	T	C	S	D□.b	KnX	KnY	KnM	KnS	T	C	D	R	U□\G□	V	Z	Modify	K	H	E	"□"	P
S1•	✓	✓	✓	✓			▲1												✓					
S2•	▲2																		✓					
D1•		▲3																	✓					
D2•		▲4	✓	✓			▲1												✓					

▲1 : The D□.b cannot be indexed by index registers (V and Z).
▲2 : Specify a device in the range of X000 to X007.
▲3 : Specify Y000, Y001, or Y002 transistor output of main unit, or specify Y000, Y001, Y002*2, or Y003*2 of high-speed output special adapter*1.

*1. High-speed input/output special adapter cannot be connected to FX3UC-32MT-LT.

*2. To use Y002 and Y003 of high-speed output special adapter, connect the second high-speed output special adapter.

Note:

- To use the FX3U Series main unit of relay output type, be sure to connect high-speed output special adapter. The differential line drive will be used for the outputs of the high-speed output special adapter.

▲4 : If high-speed output special adapter is not used for the FX3U PLC, or if the FX3U PLC is used, specify a transistor output number. If high-speed output special adapter is used for the FX3UC PLC, specify the following output numbers.

→ **For the outputs applicable with High-speed output special adapter, refer to Section 4.9.**

High-speed output special adapter connection position	Pulse output	Rotation direction output
The 1st adapter	D1• = for Y000	D2• = Y004
	D1• = for Y001	D2• = Y005
The 2nd adapter	D1• = for Y002	D2• = Y006
	D1• = for Y003	D2• = Y007

6.2.2 List of Related devices

1. Special auxiliary relays

The following table shows the related special auxiliary relays. Note that Y000, Y001, Y002, and Y003 are devices that determine the pulse output destinations.

Device number				Function	Attribute	Refer to
Y000	Y001	Y002	Y003*1			
M8029				"Instruction execution complete" flag	Read only	Subsection 4.4.2
M8329				"Instruction execution abnormal end" flag	Read only	Subsection 4.4.2
M8340	M8350	M8360	M8370	"Pulse output monitor" (BUSY/READY) flag	Read only	Subsection 4.4.3
M8341	M8351	M8361	M8371	Clear signal OUTPUT function enable.*2	Drivable	Subsection 4.3.4
M8342	M8352	M8362	M8372	Zero return direction specification.*2	Drivable	Subsection 4.3.3
M8343	M8353	M8363	M8373	Forward limit	Drivable	Subsection 4.3.1
M8344	M8354	M8364	M8374	Reverse limit	Drivable	Subsection 4.3.1
M8345	M8355	M8365	M8375	DOG signal logic reverse*2	Drivable	Subsection 4.3.5
M8346	M8356	M8366	M8376	Zero point signal logic reverse*2	Drivable	Subsection 4.3.6
M8348	M8358	M8368	M8378	Positioning instruction activation	Read only	Subsection 4.4.4
M8349	M8359	M8369	M8379	Pulse output stop command.*2	Drivable	Subsection 4.3.2
M8464*3	M8465*3	M8466*3	M8467*3	Clear signal device specification function enabled.*2	Drivable	Subsection 4.3.4

*1. Devices related to Y003 (pulse output destination) are valid only if two FX3U-2HSY-ADP adapters are connected to the FX3U PLC.

*2. Cleared when PLC switches from RUN to STOP.

*3. This function will be valid if Ver.2.00 or later is used.

2. Special data registers

The following table shows the related special data registers. Note that Y000, Y001, Y002, and Y003 are devices that determine the pulse output destinations.

Device number								Function	Data length	Initial value	Refer to
Y000		Y001		Y002		Y003*1					
D8340	Low-order	D8350	Low-order	D8360	Low-order	D8370	Low-order	Current value register (pls)	32-bit	0	Subsection 4.4.1
D8341	High-order	D8351	High-order	D8361	High-order	D8371	High-order				
D8342		D8352		D8362		D8372		Bias speed (Hz)	16-bit	0	Subsection 4.2.6
D8343	Low-order	D8353	Low-order	D8363	Low-order	D8373	Low-order	Maximum speed (Hz)	32-bit	100,000	Subsection 4.2.5
D8344	High-order	D8354	High-order	D8364	High-order	D8374	High-order				
D8345		D8355		D8365		D8375		Creep speed (Hz)	16-bit	1000	Subsection 4.2.4
D8346	Low-order	D8356	Low-order	D8366	Low-order	D8376	Low-order	Zero return speed (Hz)	32-bit	50,000	Subsection 4.2.3
D8347	High-order	D8357	High-order	D8367	High-order	D8377	High-order				
D8348		D8358		D8368		D8378		Acceleration time (ms)	16-bit	100	Subsection 4.2.7
D8349		D8359		D8369		D8379		Deceleration time (ms)	16-bit	100	Subsection 4.2.8
D8464*2		D8465*2		D8466*2		D8467*2		Clear signal device specification	16-bit	-	Subsection 4.3.4

*1. Devices related to Y003 (pulse output destination) are valid only if two FX3U-2HSY-ADP adapters are connected to the FX3U PLC.

*2. This function will be valid if Ver.2.00 or later is used.

6.2.3 Function and Operation

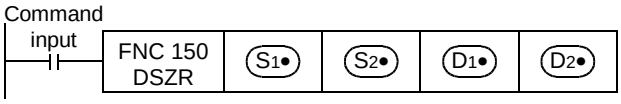

→ **For details on the maximum speed, bias speed, acceleration time, and deceleration time, refer to Subsection 4.2.5 to Subsection 4.2.8.**

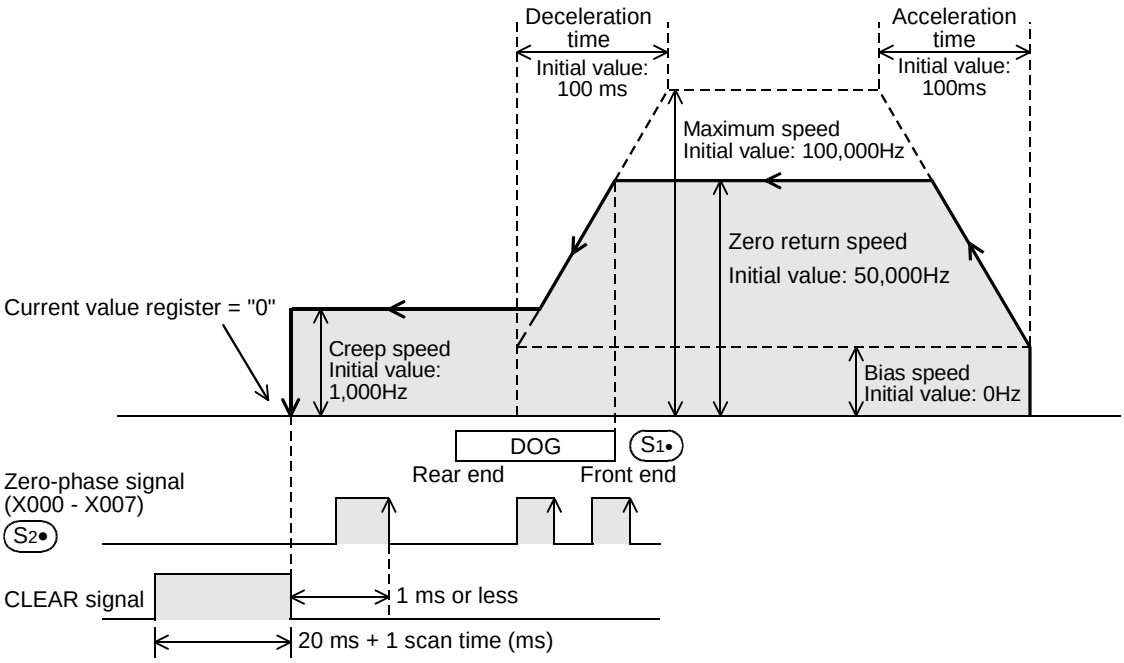

1) For (S1•), specify the near-point signal (DOG) input device number. To specify the logic of this near-point signal (DOG), turn on or off "DOG signal logic reverse" flag as shown in the following table.

Pulse output destination device	"DOG signal logic reverse" flag	Description
(D1•) = Y000	M8345	OFF: Positive logic (Turning on the input will turn on the near-point signal.) ON: Negative logic (Turning off the input will turn on the near-point signal.)
(D1•) = Y001	M8355	
(D1•) = Y002	M8365	
(D1•) = Y003	M8375	

- When an input (X000 to X017)*1 of the main unit is specified for the near-point signal (DOG) specified by (S1•), the rear end of the near-point signal (DOG) will be monitored (detected) at the 1-ms intervals (interruption).
  Under the following condition, however, monitoring (detection) of the near-point signal (DOG) rear end will be affected by the input constant or the scan time of the sequence program:
  - An input number of X020 or below or the other device (auxiliary relay, etc.) is specified.

  *1. Specify X000 to X007 for FX3U-16M□.

2) For (S2•), specify the zero-phase signal input number in the range of X000 to X007. To specify the logic of this zero-phase signal, turn on or off "Zero point signal logic reverse" flag as shown in the following table.
If the same input is specified for both the near-point signal and the zero-phase signal, the logic of the zero-phase signal will be specified by the device of the near-point signal (DOG), not the following device. In this case, in the same way as ZRN instruction, operation will be performed at the front and rear ends of the near-point signal (DOG) without using the zero-phase signal.

Pulse output destination device	"Zero point signal logic reverse" flag	Description
(D1•) = Y000	M8346	OFF: Positive logic (Turning on the input will turn on the near-point signal.) ON: Negative logic (Turning off the input will turn on the near-point signal.)
(D1•) = Y001	M8356	
(D1•) = Y002	M8366	
(D1•) = Y003	M8376	

3) For (D1•), specify the pulse output number in the range of Y000 to Y003.

4) For (D2•), specify the rotation direction signal output device number. If the high-speed output special adapter is not used for the FX3U PLC, or if the FX3UC PLC is used, specify a transistor output number.
If high-speed output special adapter is used for the FX3U PLC, specify the following output numbers.

High-speed output special adapter connection position	Pulse output	Rotation direction output
The 1st adapter	(D1•) = for Y000	(D2•) = Y004
	(D1•) = for Y001	(D2•) = Y005
The 2nd adapter	(D1•) = for Y002	(D2•) = Y006
	(D1•) = for Y003	(D2•) = Y007

The rotation direction depends on the ON/OFF status of the specified device as shown in the following table.
During execution of this instruction, however, do not use the output specified by (D2•).

ON/OFF status of device specified by (D2•)	Rotation direction (increase/reduction of current value)
ON	Forward rotation (Outputting the (D1•) pulse will increase the current value.)
OFF	Reverse rotation (Outputting the (D1•) pulse will reduce the current value.)

5) Zero return direction
To specify the zero return direction, turn on or off "zero return direction designation" flag as shown in the following table.

Pulse output destination device	"Zero return direction designation" flag	Description
(D1•) = Y000	M8342	To perform zero return in the forward rotation direction: Turn on the flag. To perform zero return in the reverse rotation direction: Turn off the flag.
(D1•) = Y001	M8352	
(D1•) = Y002	M8362	
(D1•) = Y003	M8372	

6) CLEAR signal output
This instruction can output the CLEAR signal after stop at the origin.
If it is necessary to output the CLEAR signal at the completion of zero return, turn on "CLEAR signal output function enable" flag (see the following table).
Use the FX3U/FX3UC PLC of Ver.2.00 or later to specify the CLEAR signal output device.

a) If it is not necessary to use the Clear signal device specification function, or if the FX3UC PLC of below Ver.2.00 is used.

Pulse output destination device	Status of "CLEAR signal output function enable" flag	Status of "Clear signal device specification function enable" flag*1	CLEAR signal device number
D1• = Y000	M8341=ON	M8464=OFF	Y004
D1• = Y001	M8351=ON	M8465=OFF	Y005
D1• = Y002	M8361=ON	M8466=OFF	Y006
D1• = Y003	M8371=ON	M8467=OFF	Y007

*1. Use the FX3U/FX3UC PLC of Ver.2.00 or later to use "Clear signal device specification function enable" flag.

b) If it is necessary to use the Clear signal device specification function:
Turn on "Clear signal device specification function enable" flag to specify the CLEAR signal (output Y) for the pulse output destination device using the Clear signal device specification device.

FX3UC Ver.2.00 FX3U Ver.2.00

→ **For the example on a program, refer to Subsection 4.3.4 or Subsection 4.5.1.**

Pulse output destination device	Status of "CLEAR signal output function enable" flag	Status of "Clear signal device specification function enable" flag*1	Clear signal device specification device
D1• = Y000	M8341=ON	M8464=ON	D 8464
D1• = Y001	M8351=ON	M8465=ON	D 8465
D1• = Y002	M8361=ON	M8466=ON	D 8466
D1• = Y003	M8371=ON	M8467=ON	D 8467

7) Zero return speed
Use the devices shown in the following table to set the zero return speed. Be sure to set the zero return speed so that the relation with the other speeds can be "bias speed ≤ zero return speed ≤ maximum speed".

- If "zero return speed > maximum speed", operation will be performed at the maximum speed.

Pulse output destination device	Bias speed	Zero return speed	Maximum speed	Initial value
D1• = Y000	D8342	D8347,D8346	D8344,D8343	50,000(Hz)
D1• = Y001	D8352	D8357,D8356	D8354,D8353	
D1• = Y002	D8362	D8367,D8366	D8364,D8363	
D1• = Y003	D8372	D8377,D8376	D8374,D8373	

8) Creep speed
Use the devices shown in the following table to set the creep speed. Be sure to set the creep speed so that the relation with the other speeds can be "bias speed ≤ creep speed ≤ maximum speed".

Pulse output destination device	Bias speed	Creep speed	Maximum speed	Initial value
D1• = Y000	D8342	D8345	D8344,D8343	1,000(Hz)
D1• = Y001	D8352	D8355	D8354,D8353	
D1• = Y002	D8362	D8365	D8364,D8363	
D1• = Y003	D8372	D8375	D8374,D8373	

1. Zero return operation

Zero return operation is described below assuming that Y000 is specified as the pulse output destination device by (D1•). For this reason, if Y001, Y002, or Y003 is specified, it is necessary to change the output number of each related flag.

→ **For details of related flags, refer to Section 4.1 to Section 4.4, or Subsection 6.2.2.**

1) Specify the zero return direction.
   Turn on or off "zero return direction designation" flag (M8342) to specify the zero return direction.
2) Execute DSZR instruction to carry out zero return.
3) Transfer operation will be performed in the direction specified by "zero return direction designation" flag (M8342) at the speed specified by "zero return speed designation" device (D8347, D8346).
4) If the near-point signal (DOG) specified by (S1•) is turned on*1, the speed will be reduced to the creep speed (D8345).
5) After turning off*1 the near-point signal (DOG) specified by (S1•), if the zero-phase signal specified by (S2•) is turned on*2, the pulse outputting operation will be immediately stopped.
   If the same input is specified for both the near-point signal and the zero-phase signal, turning off*1 the near-point signal (DOG) will immediately stop the pulse outputting operation (just like ZRN instruction, the zero-phase signal will not be used).
6) If the CLEAR signal output function (M8341) is enabled (set to ON), the CLEAR signal (Y004) will be turned on within 1 ms after stopping the pulse outputting operation, and will be kept at the ON status for "20 ms + 1 scan time (ms)".
7) The current value register (D8341, D8340) will be reset to "0" (will be cleared).
8) "Instruction execution complete" flag (M8029) will be turned on, and the zero return operation will be completed.

→ **For details on "Instruction execution complete" flag, refer to Subsection 4.7.4.**

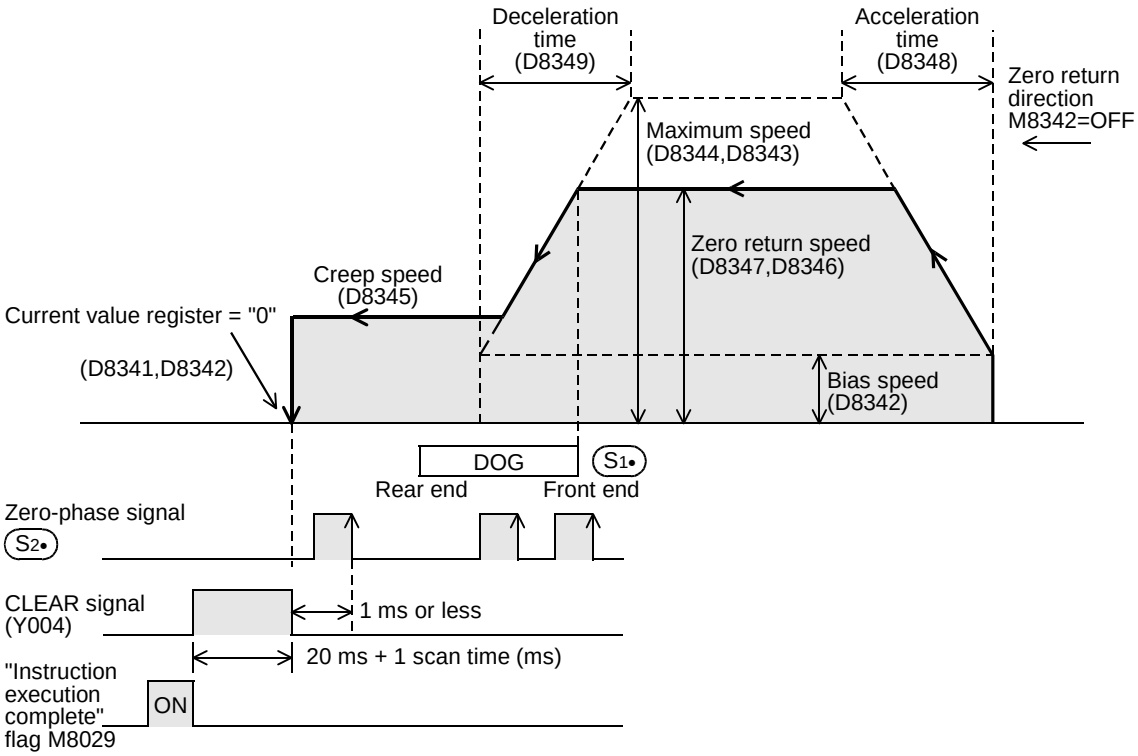

*1. This step is described assuming that "DOG signal logic reverse" flag (M8345) is off. If this flag is on, it is necessary to change the expression "on" to "off", and "off" to "on".

*2. This step is described assuming that "Zero point signal logic reverse" flag (M8346) is off. If this flag is on, it is necessary to change the expression "on" to "off", and "off" to "on".

2. DOG search function

If the forward rotation limit and the reverse rotation limit are set, the DOG search function can be used for zero return. The zero return operation depends on the zero return start position.

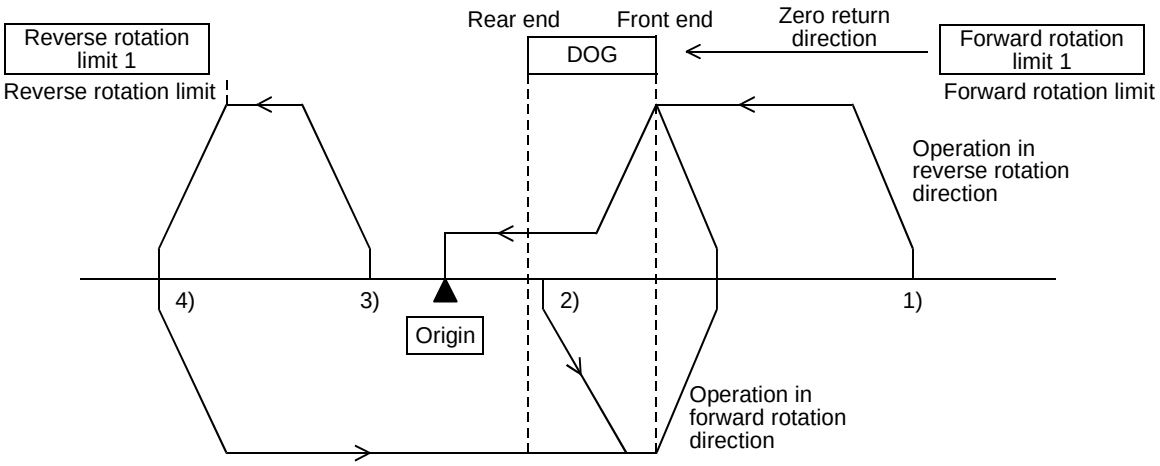

1) If the start position is before the DOG:
   a) When the zero return instruction is executed, zero return will be started.
   b) Transfer operation will be started in the zero return direction at the zero return speed.
   c) If the front end of the DOG is detected, the speed will be reduced to the creep speed.
   d) After detecting the rear end of the DOG, if the first zero-phase signal is detected, the operation will be stopped.
2) If the start position is in the DOG area:
   a) When the zero return instruction is executed, zero return will be started.
   b) Transfer operation will be started in the opposite direction of the zero return direction at the zero return speed.
   c) If the front end of the DOG is detected, the speed will be reduced and then the operation will be stopped. (The workpiece will come out of the DOG area.)
   d) Transfer operation will be restarted in the zero return direction at the zero return speed (and the workpiece will enter the DOG area again).
   e) If the front end of the DOG is detected, the speed will be reduced to the creep speed.
   f) After detecting the rear end of the DOG, if the first zero-phase signal is detected, the operation will be stopped.
3) If the start position is in the near-point signal OFF area (after the DOG):
   a) When the zero return instruction is executed, zero return will be started.
   b) Transfer operation will be started in the zero return direction at the zero return speed.
   c) If the reverse rotation limit 1 (reverse rotation limit) is detected, the speed will be reduced, and then the operation will be stopped.
   d) Transfer operation will be started in the opposite direction of the zero return direction at the zero return speed.
   e) If the front end of the DOG is detected, the speed will be reduced and the operation will be stopped. (The workpiece will detect the DOG and then come out of the DOG area.)
   f) Transfer operation will be restarted in the zero return direction at the zero return speed. (The workpiece will enter the DOG area again.)
   g) If the front end of the DOG is detected, the speed will be reduced to the creep speed.
   h) After detecting the rear end of the DOG, if the first zero-phase signal is detected, the operation will be stopped.

4) If the limit switch in the zero return direction turns ON (if the start position is at forward rotation limit 1 or reverse rotation limit 1):
   a) When the zero return instruction is executed, zero return will be started.
   b) Transfer operation will be started in the opposite direction of the zero return direction at the zero return speed.
   c) If the front end of the DOG is detected, the speed will be reduced and then the operation will be stopped. (The workpiece will detect the DOG and then come out of the DOG area.)
   d) Transfer operation will be restarted in the zero return direction at the zero return speed (and the workpiece will enter the DOG area again).
   e) If the front end of the DOG is detected, the speed will be reduced to the creep speed.
   f) After detecting the rear end of the DOG, if the first zero-phase signal is detected, the operation will be stopped.

6.2.4 Important Points

→ **For the important points for programming, refer to Section 4.7.**

- If an input (X000 to X017)*1 of the main unit is specified for the near-point signal (DOG) specified by (S1•), the rear end of the near-point signal (DOG) will be monitored (detected) at the 1ms intervals (interruption). Under the following condition, however, monitoring (detection) of the near-point signal (DOG) rear end will be affected by the constant at input or the scan time of the sequence program:
  - An input number of X020 or below or the other device (auxiliary relay, etc.) is specified.

*1. Specify X000 to X007 for FX3U-16M□.

- Properly set the DOG so that the near-point signal (DOG) can be kept at the ON status until the speed is reduced to the creep speed.
  This instruction will start speed reduction at the front end of the DOG, and will stop the operation at the rear end of the DOG or at detection of the first zero-phase signal after through the rear end of the DOG. After that, the current value register will be cleared (reset to "0").
  If the speed is not reduced to the creep speed before detecting the rear end of the DOG, the operation may not be stopped at the specified position.
- The input device specified for the near-point signal (S1•) or the zero-phase signal (S2•) cannot be used for the following items:
  - High-speed counter
  - Input interruption
  - Pulse catch
  - SPD instruction
  - DVIT instruction
  - ZRN instruction
- Since the zero-phase signal of the servo motor is used, adjust the relation between the rear end of the DOG and the zero-phase signal as shown in the following figure. If fine adjustment of the origin position is needed, adjust the position of the near-point signal (DOG).

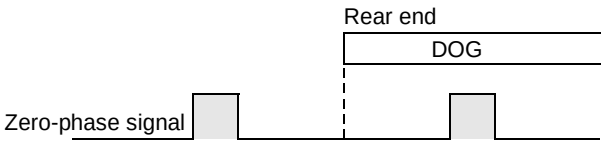

- The creep speed should be slow enough.
  The zero return instruction will not reduce the speed before stop. For this reason, if the creep speed is not low enough, the operation may not be stopped at the specified position due to inertia.
- Even if the operand is subject to change during execution of the instruction, the operation will be continued while ignoring the change. To reflect the change on the operation, turn off the command contact of the instruction, and then turn it on again.
- If the instruction activation contact is turned off during zero return operation, the speed will be reduced and then the operation will be stopped. In this case, "Instruction execution complete" flag (M8029) will not be turned on.
- If "pulse output monitor" (BUSY/READY) flag is on, the positioning instruction (including PLSR and PLSY) that uses the same output cannot be executed.
  After the instruction activation contact is turned off, if "pulse output monitor" (BUSY/READY) flag is still on, do not execute the positioning instruction (including PLSR and PLSY instructions) having the same output number.
- In the following case, "Instruction execution abnormal end" flag (M8329) will be turned on, and execution of the instruction will be completed.

→ **For details on "Instruction execution abnormal end" flag, refer to Subsection 4.7.4.**

  - If the DOG search function cannot detect the near-point signal (DOG), the speed will be reduced and then the operation will be stopped.
    In this case, "Instruction execution abnormal end" flag (M8329) will be turned on, and execution of the instruction will be completed.

6.3 Zero Return (ZRN Instruction)

Using the FX3U/FX3UC PLC of Ver.2.00 or later, use this instruction to change the CLEAR signal output destination.

6.3.1 Instruction Format

1. Instruction Format

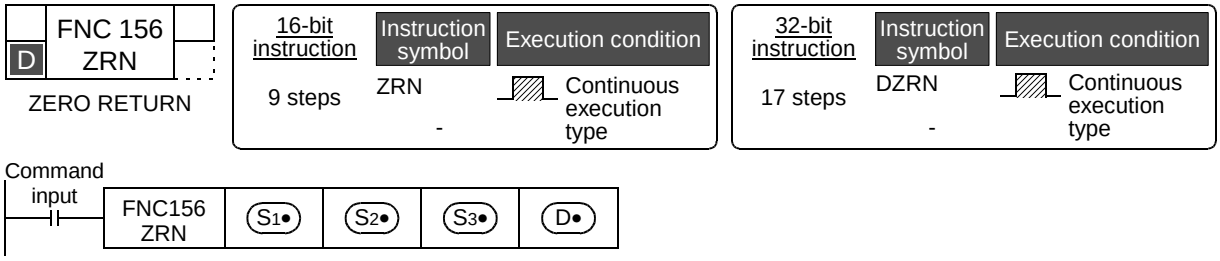

2. Data setting

Operand type	Description	Data type
S1•	Specifies zero return start speed.*1	BIN16/32-bit
S2•	Specifies creep speed. (Setting range: 10 to 32,767 Hz)	
S3•	Specifies an input numbers for near-point signal(DOG).	bit
D•	Specifies pulse output number.	

*1. Setting range : 10 to 32,767 Hz for 16-bit operation
For the 32-bit operation, however, the setting range should be as shown in the following table.

Pulse output destination		Setting range
FX3U PLC	High-speed output special adapter	10 to 200,000(Hz)
FX3UC PLC	main unit	10 to 100,000(Hz)

3. Devices

Operand type	Bit device							Word device																Others				
	System user							Digit designation				System user				Special unit	Index			Con-stant		Real num-ber	Char-acter string	Pointer
	X	Y	M	T	C	S	D□.b	KnX	KnY	KnM	KnS	T	C	D	R	U□\G□	V	Z	Modify	K	H	E	"□"	P
S1•								✓	✓	✓	✓	✓	✓	✓	✓	✓	✓	✓	✓	✓	✓			
S2•								✓	✓	✓	✓	✓	✓	✓	✓	✓	✓	✓	✓	✓	✓			
S3•	✓	✓	✓			✓	▲1												✓					
D•		▲2																	✓					

▲1 : The D□.b cannot be indexed by index registers (V and Z).

▲2 : Specify Y000, Y001, or Y002 transistor output of main unit, or specify Y000, Y001, Y002*2, or Y003*2 of high-speed output special adapter*1.

*1. High-speed input/output special adapter cannot be connected to FX3UC-32MT-LT.

*2. To use Y002 and Y003 of high-speed output special adapter, connect the second high-speed output special adapter.

Note:

- To use the FX3UC Series main unit of relay output type, be sure to connect the high-speed output special adapter. The differential line drive will be used for the outputs of the high-speed output special adapter.

6.3.2 List of Related devices

1. Special auxiliary relays

The following table shows the related special auxiliary relays. Note that Y000, Y001, Y002, and Y003 are devices that determine the pulse output destinations.

Device number				Function	Attribute	Refer to
Y000	Y001	Y002	Y003*1			
M8029				"Instruction execution complete" flag	Read only	Subsection 4.4.2
M8329				"Instruction execution abnormal end" flag	Read only	Subsection 4.4.2
M8340	M8350	M8360	M8370	"Pulse output monitor" (BUSY/READY) flag	Read only	Subsection 4.4.3
M8341	M8351	M8361	M8371	Clear signal OUTPUT function enable.*2	Drivable	Subsection 4.3.4
M8343	M8353	M8363	M8373	Forward limit	Drivable	Subsection 4.3.1
M8344	M8354	M8364	M8374	Reverse limit	Drivable	Subsection 4.3.1
M8348	M8358	M8368	M8378	Positioning instruction activation.	Read only	Subsection 4.4.4
M8349	M8359	M8369	M8379	Pulse output stop command.*2	Drivable	Subsection 4.3.2
M8464*3	M8465*3	M8466*3	M8467*3	Clear signal device specification function enabled.*2	Drivable	Subsection 4.3.4

*1. Devices related to Y003 (pulse output destination) are valid only if two FX3U-2HSY-ADP adapters are connected to the FX3U PLC.
*2. Cleared when PLC switches from RUN to STOP.
*3. This function will be valid if Ver.2.00 or later is used.

2. Special data registers

The following table shows the related special data registers. Note that Y000, Y001, Y002, and Y003 are devices that determine the pulse output destinations.

Device number								Device number	Data length	Initial value	Refer to
Y000		Y001		Y002		Y003*1					
D8340	Low-order	D8350	Low-order	D8360	Low-order	D8370	Low-order	Current value register (pls)	32-bit	0	Subsection 4.4.1
D8341	High-order	D8351	High-order	D8361	High-order	D8371	High-order				
D8342		D8352		D8362		D8372		Bias speed (Hz)	16-bit	0	Subsection 4.2.6
D8343	Low-order	D8353	Low-order	D8363	Low-order	D8373	Low-order	Maximum speed (Hz)	32-bit	100,000	Subsection 4.2.5
D8344	High-order	D8354	High-order	D8364	High-order	D8374	High-order				
D8348		D8358		D8368		D8378		Acceleration time (ms)	16-bit	100	Subsection 4.2.7
D8349		D8359		D8369		D8379		Deceleration time (ms)	16-bit	100	Subsection 4.2.8
D8464*2		D8465*2		D8466*2		D8467*2		Clear signal device specification	16-bit	-	Subsection 4.3.4

*1. Devices related to Y003 (pulse output destination) are valid only if two FX3U-2HSY-ADP adapters are connected to the FX3U PLC.
*2. This function will be valid if Ver.2.00 or later is used.

6.3.3 Function and operation

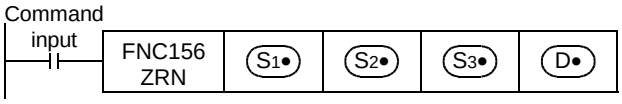

→ **For details on the maximum speed, bias speed, acceleration time and deceleration time, refer to Subsection 4.2.5 to Subsection 4.2.8.**

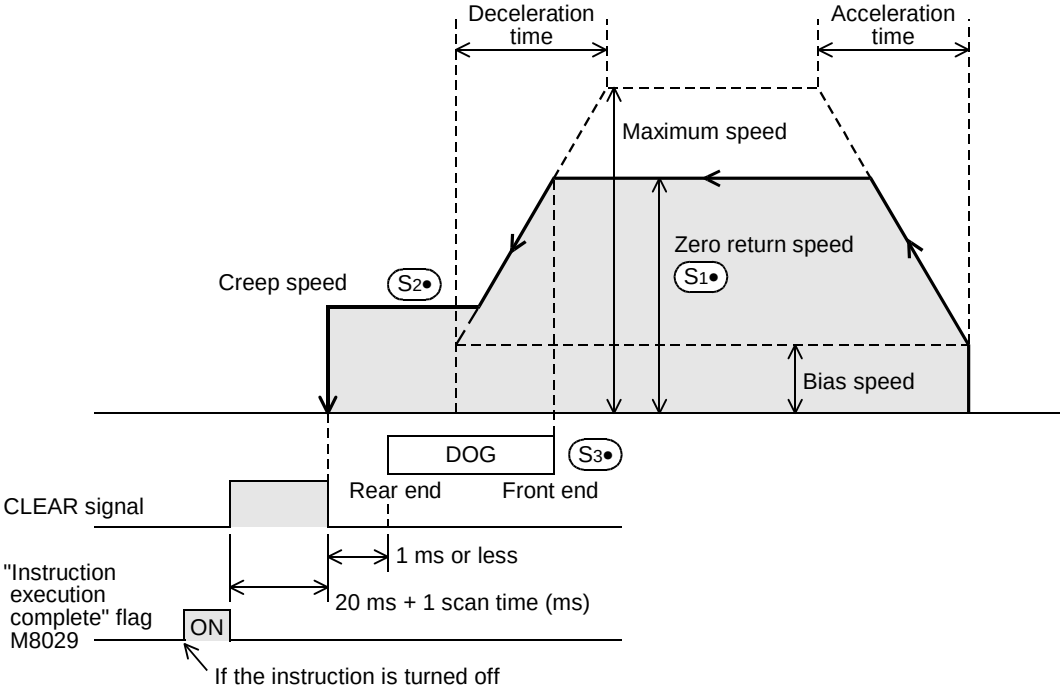

1) For S1•, specify the zero return speed.
If the set zero return speed value is more than the maximum speed value, the operation will be performed at the maximum speed.

		Setting range
16-bit operation		10 to 32,767(Hz)
32-bit operation	When high-speed output special adapter is used	10 to 200,000(Hz)
	When transistor output of main unit is used	10 to 100,000(Hz)

Note that the zero return speeds shown in the following table will not be adopted.

Pulse output destination device	Zero return speed
D1• = Y000	D8347,D8346
D1• = Y001	D8357,D8356
D1• = Y002	D8367,D8366
D1• = Y003	D8377,D8376

2) For S2•, specify the creep speed.
Setting range: 10 to 32,767 Hz

3) For (S3•), specify the near-point signal (DOG) input device number (NO contact).
Turning on the near-point signal will reduce the speed to the creep speed. Turning off the near-point signal will complete the zero return operation.

→ **For details, refer to "1. Zero return operation".**

- If an input (X000 to X007) of the main unit is specified for the input signal, the interruption function will be adopted to stop the operation. (To output the CLEAR signal, turn on "CLEAR signal output function enable" flag.)
  Under the following condition, however, operation may be affected by the input constant or the scan time of the sequence program, and the operation, therefore, may not be stopped exactly at the origin.
  -An input number of X010 or below or the other device (auxiliary relay, etc.) is specified.
- If input relay X010 or below is specified for the near-point signal, the input filter (10 ms) will be adopted.

4) For (D•), specify the pulse output number in the range of Y000 to Y003.

5) Zero return direction
For this instruction, the zero return direction is set to the reverse rotation direction.
(During zero return operation, the value indicated on the current value register will be reduced.)

→ **For details on programming, refer to Section 4.7.**
→ **To use main unit (transistor output), refer to Section 4.8.**
→ **To use high-speed output special adapter, refer to Section 4.9.**

a) To perform zero return in the forward rotation direction, follow the procedure shown below and control Turn on Y□□□ (rotational direction signal).
b) Refresh Y□□□ output using REF (FNC50) instruction.
c) Execute ZRN instruction (zero return instruction).
d) By execution completion flag (M8029) of ZRN instruction (zero return instruction), reset Y□□□ (rotational direction signal).

Example of program:
Regarding the program shown below, Y004 is specified as the rotation direction signal output device for Y000.

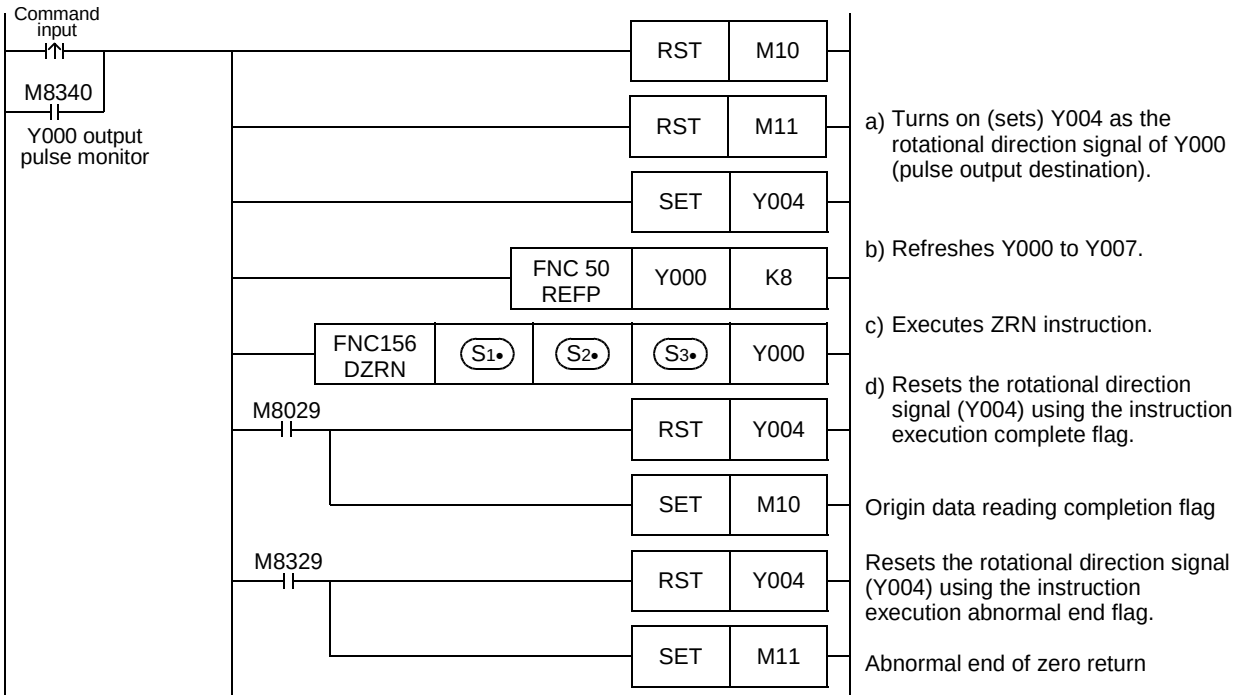

6) CLEAR signal output
This instruction can output the CLEAR signal after stop at the origin. If it is necessary to output the CLEAR signal at the completion of zero return, turn on "CLEAR signal output function enable" flag (see the following table). Use the FX3U/FX3UC PLC of Ver.2.00 or later to specify the CLEAR signal output device.

a) If it is not necessary to use the Clear signal device specification function, or if the FX3UC PLC of below Ver.2.00 is used:

Pulse output destination device	Status of "CLEAR signal output function enable" flag	Status of "Clear signal device specification function enable" flag*1	CLEAR signal device number
D1• = Y000	M8341=ON	M8464=OFF	Y004
D1• = Y001	M8351=ON	M8465=OFF	Y005
D1• = Y002	M8361=ON	M8466=OFF	Y006
D1• = Y003	M8371=ON	M8467=OFF	Y007

*1. Use the FX3U/FX3UC PLC of Ver.2.00 or later to use "Clear signal device specification function enable" flag.

b) If it is necessary to use the Clear signal device specification function:
Turn on "Clear signal device specification function enable" flag to specify the CLEAR signal (output Y) for the pulse output destination device using the Clear signal device specification device.

FX3UC Ver.2.00 FX3U Ver.2.00

→ **For the example of a program, refer to Subsection 4.3.4 or Subsection 4.5.1.**

Pulse output destination device	Status of "CLEAR signal output function enable" flag	Status of "Clear signal device specification function enable" flag	Clear signal device specification device
D1• = Y000	M8341=ON	M8464=ON	D 8464
D1• = Y001	M8351=ON	M8465=ON	D 8465
D1• = Y002	M8361=ON	M8466=ON	D 8466
D1• = Y003	M8371=ON	M8467=ON	D 8467

1. Zero return operation

Zero return operation is described below assuming that Y000 is specified as the pulse output destination device by (D•). For this reason, if Y001, Y002, and Y003 are specified, it is necessary to change the output number of each related flag (special auxiliary relay, special data register).

→ **For details on related flags, refer to Section 4.1 to Section 4.4, or Subsection 6.2.2.**

1) Execute ZRN instruction to carry out zero return.
2) Transfer operation will be performed at the zero return speed specified by (S1•).
3) If the near-point signal (DOG) specified by (S3•) is turned on, the speed will be reduced to the creep speed specified by (S2•).
4) If the near-point signal (DOG) specified by (S3•) is turned off, the pulse outputting operation will be immediately stopped.
5) If the CLEAR signal output function (M8341) is enabled (set to ON), the CLEAR signal (Y004) will be turned on within 1 ms after stopping the pulse outputting operation, and will be kept at the ON status for "20 ms + 1 scan time (ms)".
6) The current value register (D8341, D8340) will be reset to "0" (will be cleared).
7) "Instruction execution complete" flag will be turned on, and the zero return operation will be completed.

→ **For details on "Instruction execution complete" flag, refer to Subsection 4.7.4.**

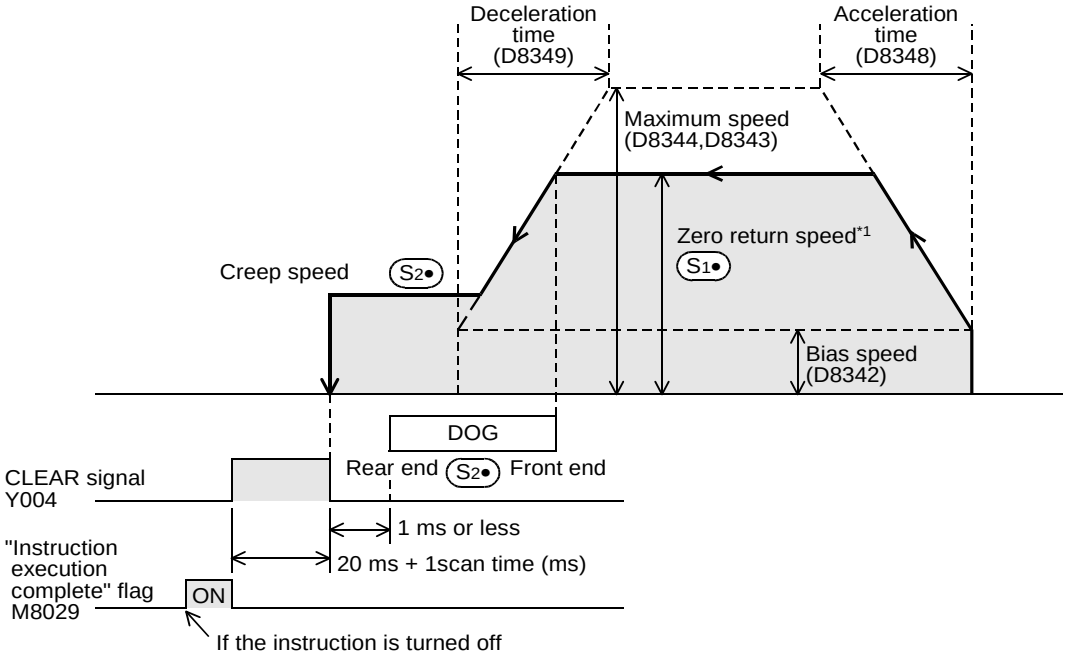

*1. Note that the zero return speeds shown in the following table will not be adopted.

Pulse output destination device	Zero return speed
(D1•) = Y000	D8347,D8346
(D1•) = Y001	D8357,D8356
(D1•) = Y002	D8367,D8366
(D1•) = Y003	D8377,D8376

6.3.4 Important Points

→ **For the important points of programming, refer to Section 4.7.**

- If an input (X000 to X007) of the main unit is specified for the near-point input signal specified by (S3·), the interruption function will be adopted to stop the operation.
  Under the following condition, however, operation may be affected by the input constant or the scan time of the sequence program.
  - An input number of X010 or below or the other device (auxiliary relay, etc.) is specified.
    If input relay X010 or below is specified for the near-point signal, the input filter (10 ms) will be adopted.
- If an input (X000 to X007) is specified for the near-point signal (S3·), the input cannot be used for the following items:
  - High-speed counter
  - Input interruption
  - Pulse catch
  - SPD instruction
  - DSZR instruction
  - DVIT instruction
- Properly set the DOG so that the near-point signal (DOG) can be kept at the ON status until the speed is reduced to the creep speed.
  This instruction will start speed reduction to the creep speed at the front end of the DOG, and will stop the operation at the rear end of the DOG. After that, the current value register will be cleared (reset to "0").
  If the speed is not reduced to the creep speed before detecting the rear end of the DOG, the operation may not be stopped at the specified position.
- The creep speed should be low enough.
  The zero return instruction will not reduce the speed before stop. For this reason, if the creep speed is not low enough, the operation may not be stopped at the specified position due to inertia.
- The DOG search function is not adopted for this instruction. For this reason, start the zero return operation on the front side of the near-point signal. If it is necessary to use the DOG search function, use the DSZR instruction.
- The zero-phase signal of servo motor cannot be used. For this reason, if fine adjustment of the origin position is needed, adjust the position of the near-point signal (DOG).
- If the instruction activation contact is turned off during zero return operation, the speed will be reduced and then the operation will be stopped. In this case, "Instruction execution complete" flag (M8029) will not be turned on.
- While "pulse output monitor" (BUSY/READY) flag is on, the positioning instruction (including PLSR and PLSY) that uses the same output cannot be executed.
  After the instruction activation contact is turned off, if "pulse output monitor" (BUSY/READY) flag is still on, do not execute the positioning instruction (including PLSR and PLSY instructions) having the same output number.
- In the following case, "Instruction execution abnormal end" flag (M8329) will be turned on, and execution of the instruction will be completed.
  → **For details on "Instruction execution abnormal end" flag, refer to Subsection 4.7.4.**
  - If the forward limit flag or the reverse limit flag is turned on, the speed will be reduced and then the operation will be stopped. In this case, "Instruction execution abnormal end" flag (M8329) will be turned on when completing execution of the instruction.
  - If the limit flag (forward limit flag or reverse limit flag) on the opposite side of the operation direction is turned on, the speed will be reduced and then the operation will be stopped.
    In this case, "Instruction execution abnormal end" flag (M8329) will be turned on when completing execution of the instruction.

7. Absolute Position Detection System (Absolute Current Value Read)-ABS Instruction

Since the absolute position detection system is adopted, the built-in positioning function uses the current ABS value read-out (ABS) instruction to read out the current value (absolute position (ABS) data) from the MELSERVO-H, -J2(S), or -J3 servo amplifier.

→ **For the items to be observed in programming, refer to Section 4.7.**
→ **For the servo amplifier and connection of the MELSERVO Series, refer to the Appendix and the examples of connection.**

7.1 Instruction Format

1. Instruction Format

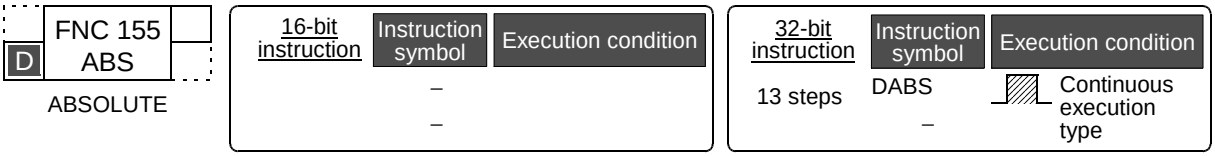

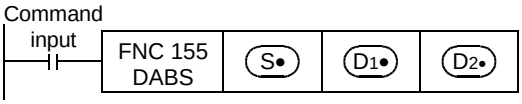

2. Data setting

Operand type	Description	Data type
S•	Specifies the first number of the device that inputs the absolute position (ABS) data from the servo amplifier. Number of occupied points: 3 (first point for S•)	BIN16-bit
D1•	Specifies the first number of the device that outputs the absolute position (ABS) data control signal to the servo amplifier. Number of occupied points: 3 (first point for D1•)	
D2•	Specifies the absolute position (ABS) data (32-bit value) storage device number.	BIN32-bit

3. Devices

Operand type	Bit device							Word device												Others				
	System user							Digit designation				System user				Special unit	Index			Con-stant		Real num-ber	Char-acter string	Pointer
	X	Y	M	T	C	S	D□.b	KnX	KnY	KnM	KnS	T	C	D	R	U□/G□	V	Z	Modify	K	H	E	"□"	P
S•	✓	✓	✓			✓	▲												✓					
D1•		✓	✓			✓	▲												✓					
D2•									✓	✓	✓	✓	✓	✓	✓	✓	✓	✓	✓					

▲ : The D□.b cannot be indexed by index registers (V and Z).

7.2 List of Related Devices

→ **For details on the related devices, refer to Section 4.1 to Section 4.4.**

1. Special auxiliary relays

The following table shows the related special auxiliary relays.
Note that Y000, Y001, Y002, and Y003 are devices that determine the pulse output destinations.

→ **For details on PLSY (FNC57), PWM (FNC58), and PLSR (FNC59) instructions, refer to the programming manual.**

Device number				Function	Attribute	Refer to
Y000	Y001	Y002	Y003*1			
M8029				"Instruction execution complete" flag	Read only	Subsection 4.4.2
M8329				"Instruction execution abnormal end" flag	Read only	Subsection 4.4.2

*1. Devices related to Y003 (pulse output destination) are valid only if two FX3U-2HSY-ADP adapters are connected to the FX3U PLC.

2. Special data registers

The following table shows the related special data registers. Note that Y000, Y001, Y002, and Y003 are devices that determine the pulse output destinations

Device number								Function	Data length	Initial value	Refer to
Y000		Y001		Y002		Y003*1					
D8340	Low-order	D8350	Low-order	D8360	Low-order	D8370	Low-order	Current value register(pls)	32-bit	0	Subsection 4.4.1
D8341	High-order	D8351	High-order	D8361	High-order	D8371	High-order				

*1. Devices related to Y003 (pulse output destination) are valid only if two FX3U-2HSY-ADP adapters are connected to the FX3U PLC.

7.3 Function and Operation

Connect the MR-H, MR-J2, or MR-J3 servo motor (with absolute position detection function) manufactured by Mitsubishi to your system, and use this instruction to read out the absolute position (ABS) data. The data will be converted into the pulse value before being read out.

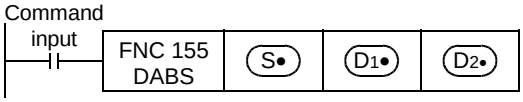

1) For (S•), specify the first number of the device that inputs the absolute position (ABS) data from the servo amplifier. Number of occupied points: 3 ((S•), (S•)+1, (S•)+2)

2) For (D1•), specify the first number of the device that outputs the absolute position (ABS) data control signal to the servo amplifier. Be sure to use the transistor outputs as the outputs of the PLC.
Number of occupied points: 3 ((D1•), (D1•)+1, (D1•)+2)

3) For (D2•), specify the absolute position (ABS) data (32-bit value) storage device number to store the data read out from the servo amplifier. Handle the absolute position (ABS) data as follows:

- To use the built-in pulse output function, be sure to specify the following current value registers for the read-out ABS data:

Y000	Y001	Y002	Y003*1
D8341,D8340	D8351,D8350	D8361,D8360	D8371, D8370

*1. Devices related to Y003 (pulse output destination) are valid only if two FX3U-2HSY-ADP adapters are connected to the FX3U PLC.

- When using FX2N-1PG(-E) or FX2N-10PG, read out the ABS data from the data register first, and then write the read-out ABS data into the current value register of FX2N-1PG(-E) or FX2N-10PG using DTO instruction. Or directly specify buffer memory (U□\G□) in (D•).

1. Detection of absolute position

1) If DABS (FNC155) instruction turns ON, the PLC will activate the servo-ON output and the ABS transfer mode output.
2) 32+6-bit data communication will be performed while mutually checking the data sending/ receiving condition using "send data ready" signal and "ABS data request" signal.
3) The 2-bit line (line for ABS bit 0 and bit 1) will be used for data transmission.
4) At the completion on ABS data reading, "Instruction execution complete" flag (M8029) will be turned on.
   → **For details of "Instruction execution complete" flag, refer to Subsection 4.7.4.**

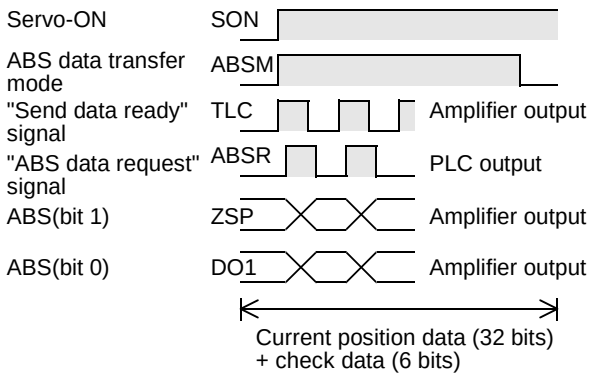

7.4 Initial Zero Return

When your system is established, even if your servo motor is equipped with the absolute position detection function, it is necessary to perform zero return at least once to send the CLEAR signal to the servo motor. Use one of the following methods for the initial zero return:

1) Execute DSZR(FNC150) with DOG search zero return instruction or ZRN(FNC156) zero return instruction using the CLEAR signal function to complete zero return.
2) Carry out zero return of the machine using the position adjustment method in the jogging operation mode or manual operation mode, and then input the CLEAR signal.
   To input the CLEAR signal, use the output of the PLC or the external switch shown in the following figure.

Example for MR-J2-□A

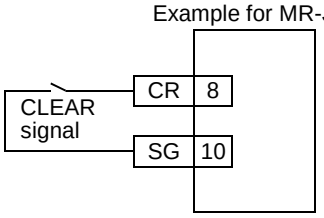

7.5 Important Points

- Set the timing for your system so that the power of the servo amplifier is turned on first, and then the power of the PLC, or that these powers are turned on at the same time.
- Select an input so that DABS (FNC155) instruction activation contact can be kept at the ON status even after reading out the ABS data. If the instruction activation contact is turned off at the completion of ABS data reading, the servo-ON (SON) signal will be turned off, and the operation will not be performed.
- If the instruction activation contact is turned off during data reading, data reading will be stopped.
- This instruction is for the 32-bit data only. Be sure to input this instruction as DABS instruction.
- Observe the following items to use FX2N-1PG(-E) or FX2N-10PG:
  - The ABS data will be converted into the pulse value before being read out. For this reason, be sure to specify "motor system" when setting parameters (BFM #3) for FX2N-1PG(-E).
  - When writing the ABS data into FX2N-10PG, be sure to use the current value register (BFM #40, BFM #39) to store the converted pulse data.
- Even if data-communication with the servo amplifier is not performed properly, no error will be detected. For this reason, it is necessary to monitor the handshaking operation using the time-out error detection timer to detect a handshake error.

→ **For the example programs, refer to Section 12.5.**

8. 1-Speed Positioning - DRVI/DRVA Instruction

The Built-in positioning function uses the drive to increment (DRVI) instruction or the drive to absolute (DRVA) instruction to perform 1-speed positioning. Note that these two instructions use different target position setting methods.

Instruction	Target position setting method
Drive to Increment (DRVI) instruction	Incremental method: Uses a relative address to specify the target position.
Drive to Absolute (DRVA) instrument	Absolute method: Uses an absolute address to specify the target position.

→ **For the important items common to all the positioning instructions, refer to Section 4.7.**
→ **For example programs, refer to Chapter 12.**

8.1 Incremental Method and Absolute Method

There are two target position setting methods for positioning operation as described below:

1. Incremental method (relative address setting method)

While regarding the current position as the start point, specify the transfer direction and the transfer distance (relative address) to determine the target position.

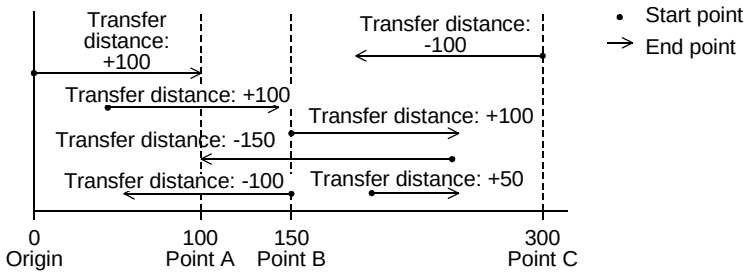

For example:

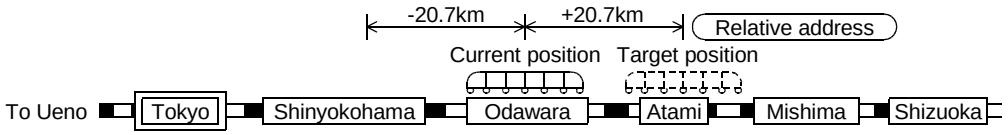

To go from Odawara (current position) to Atami (target position), set the distance (+20.7 km) from Odawara to Atami.

2. Absolute method (absolute address setting method)

Specify the distance (absolute address) from the origin to the target position. In this case, any position can be the start point (current position).

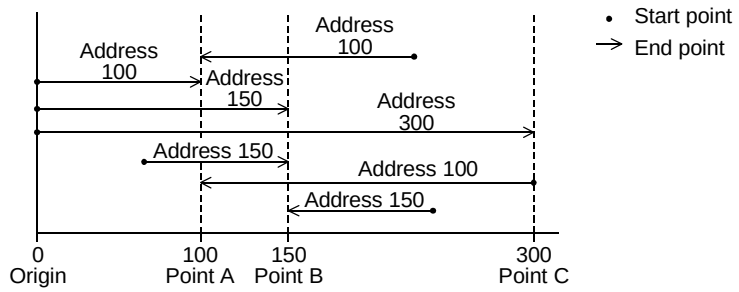

For example:

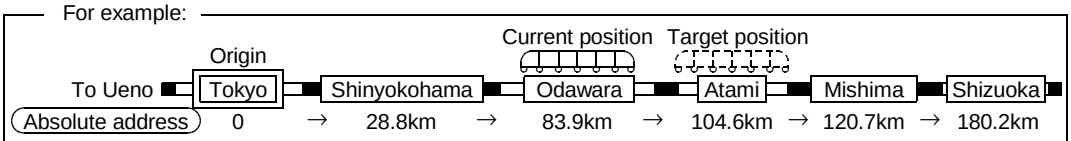

To go from Odawara (current position) to Atami (target position), set the distance (+104.6 km) from Tokyo (origin) to Atami.

8.2 Drive to Increment - DRVI Instruction

8.2.1 Instruction Format

1. Instruction Format

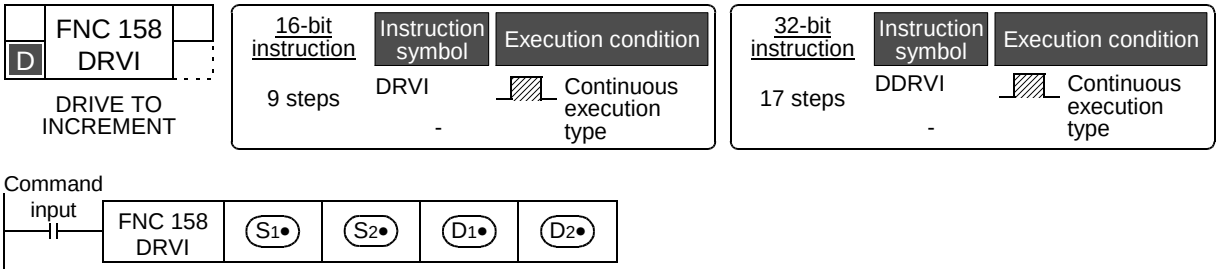

2. Data setting

Operand type	Description	Data type
S1•	Specifies the number of output pulses (relative address).*1	BIN16/32-bit
S2•	Specifies the output pulse frequency.*2	
D1•	Specifies the pulse output number.	bit
D2•	Specifies the rotation direction signal output destination device number.	

*1. Setting range : -32,768 to +32,767 (excluding 0) for 16-bit operation
: -999,999 to +999,999 (excluding 0) for 32-bit operation

*2. Setting range : 10 to 32,767 Hz for 16-bit operation
For the 32-bit operation, however, the setting range should be as shown in the following table.

Pulse output destination		Setting range
FX3U PLC	High-speed output special adapter	10 to 200,000(Hz)
FX3UC PLC	Main unit	10 to 100,000(Hz)

3. Devices

Operand type	Bit device							Word device																Others			
	System user							Digit designation				System user				Special unit	Index			Con-stant		Real num-ber	Char acter string	Pointer
	X	Y	M	T	C	S	D□.b	KnX	KnY	KnM	KnS	T	C	D	R	U□\G□	V	Z	Modfy	K	H	E	"□"	P
S1•								✓	✓	✓	✓	✓	✓	✓	✓	✓	✓	✓	✓	✓	✓			
S2•								✓	✓	✓	✓	✓	✓	✓	✓	✓	✓	✓	✓	✓	✓			
D1•		▲1																	✓					
D2•		▲2	✓			✓	▲3												✓					

▲1 : Specify Y000, Y001, or Y002 transistor output of main unit, or specify Y000, Y001, Y002*2, or Y003*2 of high-speed output special adapter*1.

*1. High-speed input/output special adapter cannot be connected to FX3UC-32MT-LT.

*2. To use Y002 and Y003 of the high-speed output special adapter, connect the second high-speed output special adapter.

Note:

- To use the FX3U Series main unit of relay output type, be sure to connect the high-speed output special adapter. The differential line drive will be used for the outputs of the high-speed output special adapter.

▲2 : If the high-speed output special adapter is not used for the FX3U PLC, or if the FX3UC PLC is used, specify a transistor output number. If the high-speed output special adapter is used for the FX3U PLC, specify the following output numbers.

→ **For the outputs applicable with High-speed output special adapter, refer to section 4.9.**

High-speed output special adapter connection position	Pulse output	Rotation direction output
The 1st adapter	(D1•) = for Y000	(D2•) = Y004
	(D1•) = for Y001	(D2•) = Y005
The 2nd adapter	(D1•) = for Y002	(D2•) = Y006
	(D1•) = for Y003	(D2•) = Y007

▲3 : The D□.b cannot be indexed by index registers (V and Z).

8.2.2 List of Related Devices

1. Special auxiliary relays

The following table shows the related special auxiliary relays. Note that Y000, Y001, Y002, and Y003 are devices that determine the pulse output destinations.

Device number				Function	Attribute	Refer to
Y000	Y001	Y002	Y003*1			
M8029				"Instruction execution complete" flag	Read only	Subsection 4.4.2
M8329				"Instruction execution abnormal end" flag	Read only	Subsection 4.4.2
M8340	M8350	M8360	M8370	"Pulse output monitor" (BUSY/READY) flag	Read only	Subsection 4.4.3
M8343	M8353	M8363	M8373	Forward limit	Drivable	Subsection 4.3.1
M8344	M8354	M8364	M8374	Reverse limit	Drivable	Subsection 4.3.1
M8348	M8358	M8368	M8378	Positioning instruction activation.	Read only	Subsection 4.4.4
M8349	M8359	M8369	M8379	Pulse output stop command*2	Drivable	Subsection 4.3.2

*1. Devices related to Y003 (pulse output destination) are valid only if two FX3U-2HSY-ADP adapters are connected to the FX3U PLC.

*2. Cleaned when PLC switches from RUN to STOP.

2. Special data registers

The following table shows the related special data registers. Note that Y000, Y001, Y002, and Y003 are devices that determine the pulse output destinations.

Device number								Function	Data length	Initial value	Refer to
Y000		Y001		Y002		Y003*1					
D8340	Low-order	D8350	Low-order	D8360	Low-order	D8370	Low-order	Current value register (pls)	32-bit	0	Subsection 4.4.1
D8341	High-order	D8351	High-order	D8361	High-order	D8371	High-order				
D8342		D8352		D8362		D8372		Bias speed (Hz)	16-bit	0	Subsection 4.2.6
D8343	Low-order	D8353	Low-order	D8363	Low-order	D8373	Low-order	Maximum speed (Hz)	32-bit	100,000	Subsection 4.2.5
D8344	High-order	D8354	High-order	D8364	High-order	D8374	High-order				
D8345		D8355		D8365		D8375		Creep speed (Hz)	16-bit	1000	Subsection 4.2.4
D8346	Low-order	D8356	Low-order	D8366	Low-order	D8376	Low-order	Zero return speed (Hz)	32-bit	50,000	Subsection 4.2.3
D8347	High-order	D8357	High-order	D8367	High-order	D8377	High-order				
D8348		D8358		D8368		D8378		Acceleration time (ms)	16-bit	100	Subsection 4.2.7
D8349		D8359		D8369		D8379		Deceleration time (ms)	16-bit	100	Subsection 4.2.8

*1. Devices related to Y003 (pulse output destination) are valid only if two FX3U-2HSY-ADP adapters are connected to the FX3U PLC.

8.2.3 Function and Operation

This instruction is a 1-speed positioning instruction and uses the relative drive method. For this instruction, the transfer distance from the current position to the target position should be specified together with a plus or minus sign. This method is also referred to as the incremental (relative) drive method.

→ **For details on "Instruction execution complete" flag, refer to Subsection 4.7.4.**
→ **For details on the maximum speed, bias speed, acceleration time, and deceleration time, refer to Section 4.2.**

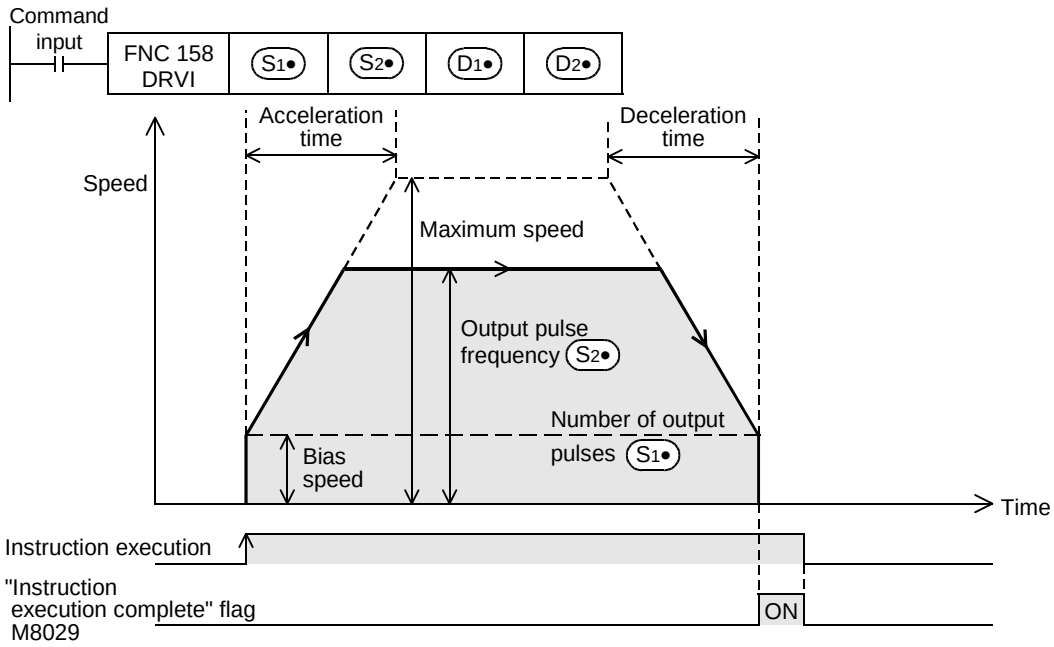

1) For S1•, specify the number of output pulses (relative address value).

	Setting range
16-bit operation	-32,768 to +32,767
32-bit operation	-999,999 to +999,999

2) For S2•, specify the output pulse frequency.

		Setting range
16-bit operation		10 to 32,767(Hz)
32-bit operation	When high-speed output special adapter is used	10 to 200,000(Hz)
	When transistor output of main unit is used	10 to 100,000(Hz)

3) For D1•, specify the pulse output number in the range of Y000 to Y003.

4) For D2•, specify the rotation direction signal output device number.
If the high-speed output special adapter is not used for the FX3U PLC, or if the FX3UC PLC is used, specify a transistor output number.
If the high-speed output special adapter is used for the FX3U PLC, specify the following output numbers.

High-speed output special adapter connection position	Pulse output destination device	Rotation direction output
The 1st adapter	D1• = for Y000	D2• = Y004
	D1• = for Y001	D2• = Y005
The 2nd adapter	D1• = for Y002	D2• = Y006
	D1• = for Y003	D2• = Y007

The rotation direction depends on the ON/OFF status of the specified device as shown in the following table.

During execution of this instruction, however, do not use the output specified by (D2•)

ON/OFF status of device specified by (D2•)	Rotation direction (increase/reduction of current value)
ON	If the number of output pulses specified by (S1•) is a positive number, the operation will be performed in the forward rotation direction. Forward rotation (Outputting the (D1•) pulse will increase the current value.)
OFF	If the number of output pulses specified by (S1•) is a negative number, the operation will be performed in the reverse rotation direction. Reverse rotation (Outputting the (D1•) pulse will reduce the current value.)

8.2.4 Important Points

→ **For the important points of programming, refer to Section 4.7.**

- Even if the operand is subject to change during execution of the instruction, the operation will be continued while ignoring the change.
  Note that the changed operand will be enabled at next activation of the instruction.
- If the instruction activation contact is turned off during execution of the instruction, the speed will be reduced and then the operation will be stopped.
  In this case, "Instruction execution complete" flag (M8029) will not be turned on.
- If the limit flag (forward limit flag or reverse limit flag) in the operation direction is turned on, the speed will be reduced and then the operation will be stopped.
  In this case, "Instruction execution abnormal end" flag (M8329) will be turned on when completing execution of the instruction.
  → **For details on "Instruction execution abnormal end" flag, refer to Subsection 4.7.4.**
- While "pulse output monitor" (BUSY/READY) flag is on, the positioning instruction (including PLSR and PLSY) that uses the same output cannot be executed.
  After the instruction activation contact is turned off, if "pulse output monitor" (BUSY/READY) flag is still on, do not execute the positioning instruction (including PLSR and PLSY instructions) having the same output number.

8.3 Drive To Absolute (DRVA Instruction)

8.3.1 Instruction Format

1. Instruction format

D	FNC 159 DRVA
	DRIVE TO ABSOLUTE

16-bit instruction	Instruction symbol	Execution condition
9 steps	DRVA -	Continuous execution type

32-bit instruction	Instruction symbol	Execution condition
17 steps	DDRVA -	Continuous execution type

Command input

FNC 159 DRVA	S1•	S2•	D1•	D2•

2. Data setting

Operand type	Description	Data type
S1•	Specifies the number of output pulses (absolute address).*1	BIN16/32-bit
S2•	Specifies the output pulse frequency.*2	
D1•	Specifies the pulse output number.	bit
D2•	Specifies the rotation direction signal output destination device number.	

*1. Setting range : -32,768 to +32,767 for 16-bit operation
: -999,999 to +999,999 for 32-bit operation

*2. Setting range : 10 to 32,767 Hz for 16-bit operation
For the 32-bit operation, however, the setting range should be as shown in the following table.

Pulse output destination		Setting range
FX3U PLC	High-speed output special adapter	10 to 200,000(Hz)
FX3UC PLC	Main unit	10 to 100,000(Hz)

3. Devices

Operand type	Bit device							Word device												Others				
	System user							Digit designation				System user				Special unit	Index			Con-stant		Real num-ber	Char-acter string	Pointer
	X	Y	M	T	C	S	D□.b	KnX	KnY	KnM	KnS	T	C	D	R	U□\G□	V	Z	Modfy	K	H	E	"□"	P
S1•								✓	✓	✓	✓	✓	✓	✓	✓	✓	✓	✓	✓	✓	✓			
S2•								✓	✓	✓	✓	✓	✓	✓	✓	✓	✓	✓	✓	✓	✓			
D1•		▲1																	✓					
D2•		▲2	✓			✓	▲3												✓					

▲1 : Specify Y000, Y001, or Y002 transistor output of main unit, or specify Y000, Y001, Y002*2, or Y003*2 of the high-speed output special adapter*1.

*1. High-speed input/output special adapter cannot be connected to FX3UC-32MT-LT.

*2. To use Y002 and Y003 of the high-speed output special adapter, connect the second high-speed output special adapter.

Caution:

- To use the FX3U Series main unit of relay output type, be sure to connect the high-speed output special adapter. The differential line drive will be used for the outputs of the high-speed output special adapter.

▲2 : If the high-speed output special adapter is not used for the FX3U PLC, or if the FX3UC PLC is used, specify a transistor output number. If the high-speed output special adapter is used for the FX3U PLC, specify the following output numbers.

High-speed output special adapter connection position	Pulse output	Rotation direction output
The 1st adapter	D1• = for Y000	D2• = Y004
	D1• = for Y001	D2• = Y005
The 2nd adapter	D1• = for Y002	D2• = Y006
	D1• = for Y003	D2• = Y007

▲3 : The D□.b cannot be indexed by index registers (V and Z).

8.3.2 List of Related Devices

1. Special auxiliary relaysx

The following table shows the related special auxiliary relays. Note that Y000, Y001, Y002, and Y003 are devices that determine the pulse output destinations.

Device number				Function	Attribute	Refer to
Y000	Y001	Y002	Y003*1			
M8029				"Instruction execution complete" flag	Read only	Subsection 4.4.2
M8329				"Instruction execution abnormal end" flag	Read only	Subsection 4.4.2
M8340	M8350	M8360	M8370	"Pulse output monitor" (BUSY/READY) flag	Read only	Subsection 4.4.3
M8343	M8353	M8363	M8373	Forward limit	Drivable	Subsection 4.3.1
M8344	M8354	M8364	M8374	Reverse limit	Drivable	Subsection 4.3.1
M8348	M8358	M8368	M8378	Positioning instruction activation.	Read only	Subsection 4.4.4
M8349	M8359	M8369	M8379	Pulse output stop command*2	Drivable	Subsection 4.3.2

*1. Devices related to Y003 (pulse output destination) are valid only if two FX3U-2HSY-ADP adapters are connected to the FX3U PLC.

*2. Cleaned when PLC switches from RUN to STOP.

2. Special data registers

The following table shows the related special data registers. Note that Y000, Y001, Y002, and Y003 are devices that determine the pulse output destinations.

Device number								Function	Data length	Default value	Refer to
Y000		Y001		Y002		Y003*1					
D8340	Low-order	D8350	Low-order	D8360	Low-order	D8370	Low-order	Current value register (pls)	32-bit	0	Subsection 4.4.1
D8341	High-order	D8351	High-order	D8361	High-order	D8371	High-order				
D8342		D8352		D8362		D8372		Bias speed (Hz)	16-bit	0	Subsection 4.2.6
D8343	Low-order	D8353	Low-order	D8363	Low-order	D8373	Low-order	Maximum speed (Hz)	32-bit	100,000	Subsection 4.2.5
D8344	High-order	D8354	High-order	D8364	High-order	D8374	High-order				
D8345		D8355		D8365		D8375		Creep speed (Hz)	16-bit	1000	Subsection 4.2.4
D8346	Low-order	D8356	Low-order	D8366	Low-order	D8376	Low-order	Zero return speed (Hz)	32-bit	50,000	Subsection 4.2.3
D8347	High-order	D8357	High-order	D8367	High-order	D8377	High-order				
D8348		D8358		D8368		D8378		Acceleration time (ms)	16-bit	100	Subsection 4.2.7
D8349		D8359		D8369		D8379		Deceleration time (ms)	16-bit	100	Subsection 4.2.8

*1. Devices related to Y003 (pulse output destination) are valid only if two FX3U-2HSY-ADP adapters are connected to the FX3U PLC.

8.3.3 Function and Operation

This instruction is a 1-speed positioning instruction and uses the absolute drive method. For this instruction, the distance from the origin (zero point) to the target position should be specified.

→ **For details on "Instruction execution complete" flag, refer to Subsection 4.7.4.**
→ **For details on the maximum speed, bias speed, acceleration time, and deceleration time, refer to Section 4.2.**

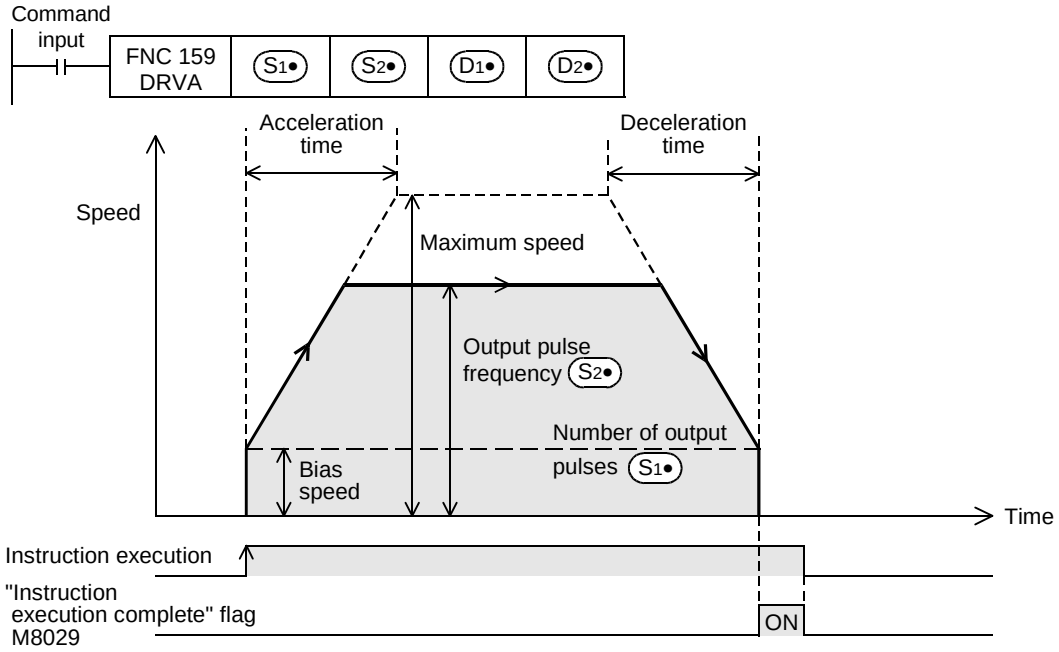

1) For S1•, specify the number of output pulses (absolute address value).

	Setting range
16-bit operation	-32,768 to +32,767
32-bit operation	-999,999 to +999,999

2) For S2•, specify the output pulse frequency.

		Setting range
16-bit operation		10 to 32,767(Hz)
32-bit operation	When high-speed output special adapter is used	10 to 200,000(Hz)
	When transistor output of main unit is used	10 to 100,000(Hz)

3) For D1•, specify the pulse output number in the range of Y000 to Y003.

4) For D2•, specify the rotation direction signal output device number.
If the high-speed output special adapter is not used for the FX3U PLC, or if the FX3UC PLC is used, specify a transistor output number. If the high-speed output special adapter is used for the FX3U PLC, specify the following output numbers.

High-speed output special adapter connection position	Pulse output destination device	Rotation direction output
The 1st adapter	D1• = for Y000	D2• = Y004
	D1• = for Y001	D2• = Y005
The 2nd adapter	D1• = for Y002	D2• = Y006
	D1• = for Y003	D2• = Y007

The rotation direction depends on the ON/OFF status of the specified device as shown in the following table.
During execution of this instruction, however, do not use the output specified by (D2•)

ON/OFF status of device specified by (D2•)	Rotation direction (increase/reduction of current value)	
ON	Forward rotation (Outputting the (D1•) pulse will increase the current value.)	The rotation direction (normal or reverse rotation) depends on which value is larger; the number of output pulses specified by (S•) (absolute address) or the value indicated on the current value register.
OFF	Reverse rotation (Outputting the (D1•) pulse will reduce the current value.)	

8.3.4 Important Points

→ **For the important points of programming, refer to Section 4.7.**

- Even if the operand is subject to change during execution of the instruction, the operation will be continued while ignoring the change.
  Note that the changed operand will be enabled at next activation of the instruction.
- If the instruction activation contact is turned off during execution of the instruction, the speed will be reduced and then the operation will be stopped.
  In this case, "Instruction execution complete" flag (M8029) will not be turned on.
- If the limit flag (forward limit flag or reverse limit flag) in the operation direction is turned on, the speed will be reduced and then the operation will be stopped. In this case, "Instruction execution abnormal end" flag (M8329) will be turned on when completing execution of the instruction.
  → **For details on "Instruction execution abnormal end" flag, refer to Subsection 4.7.4.**
- If "pulse output monitor" (BUSY/READY) flag is on, the positioning instruction (including PLSR and PLSY) that uses the same output cannot be executed.
  After the instruction activation contact is turned off, if "pulse output monitor" (BUSY/READY) flag is still on, do not execute the positioning instruction (including PLSR and PLSY instructions) having the same output number.

9. One-speed Interrupt constant quantity feed -DVIT Instruction

The Built-in positioning function uses the Interrupt Positioning (DVIT) instruction to perform one-speed interrupt constant quantity feed. If the FX3UC PLC of Ver.1.20 or later is used, this instruction can change the interruption signal input destination.
If the FX3U/FX3UC PLC of Ver.2.00 or later is used, the interruption signal can be controlled using the user program.

→ **For the items to be observed in programming, refer to Section 4.7.**

9.1 Instruction Format

1. Instruction Format

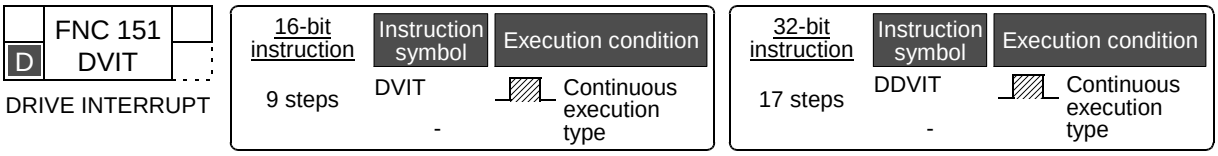

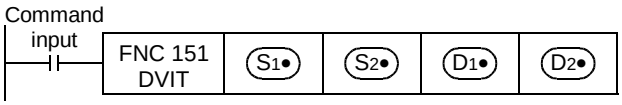

2. Data setting

Operand type	Description	Data type
S1•	Specifies the number of pulses (relative address) to be output after interruption.*1	BIN16/32-bit
S2•	Specifies the output pulse frequency.*2	
D1•	Specifies the pulse output number.	bit
D2•	Specifies the rotation direction signal output destination device number.	

*1. Setting range : -32,768 to +32,767 (excluding 0) for 16-bit operation
: -999,999 to +999,999 (excluding 0) for 32-bit operation

*2. Setting range : 10 to 32,767 Hz for 16-bit operation
For the 32-bit operation, however, the setting range should be as shown in the following table.

Pulse output destination		Setting range
FX3U PLC	High-speed output special adapter	10 to 200,000(Hz)
FX3UC PLC	Main unit	10 to 100,000(Hz)

3. Devices

Operand type	Bit device							Word device												Others				
	System user							Digit designation				System user				Special unit	Index			Con-stant		Real num-ber	Char-acter string	Pointer
	X	Y	M	T	C	S	D□.b	KnX	KnY	KnM	KnS	T	C	D	R	U□\G□	V	Z	Modify	K	H	E	"□"	P
(S1•)								✓	✓	✓	✓	✓	✓	✓	✓	✓			✓	✓	✓			
(S2•)								✓	✓	✓	✓	✓	✓	✓	✓	✓			✓	✓	✓			
(D1•)		▲1																	✓					
(D2•)		▲2	✓			✓	▲3												✓					

▲1 : Specify Y000, Y001, or Y002 transistor output of the main unit, or specify Y000, Y001, Y002*2, or Y003*2 of the high-speed output special adapter*1.

*1. High-speed input/output special adapter cannot be connected to FX3UC-32MT-LT.

*2. To use Y002 and Y003 of the high-speed output special adapter, connect the second high-speed output special adapter.

Point:

- To use the FX3U Series main unit of relay output type, be sure to connect high-speed output special adapter. The differential line drive will be used for the outputs of the high-speed output special adapter.

▲2 : If the high-speed output special adapter is not used for the FX3U PLC, or if the FX3UC PLC is used, specify a transistor output number. If the high-speed output special adapter is used for the FX3U PLC, specify the following output numbers.

→ **For the outputs applicable with High-speed output special adapter, refer to section 4.9.**

High-speed output special adapter connection position	Pulse output	Rotation direction output
The 1st adapter	(D1•) = for Y000	(D2•) = Y004
	(D1•) = for Y001	(D2•) = Y005
The 2nd adapter	(D1•) = for Y002	(D2•) = Y006
	(D1•) = for Y003	(D2•) = Y007

▲3 : The D□.b cannot be indexed by index registers (V and Z).

9.2 List of Related Devices

1. Special auxiliary relays

The following table shows the related special auxiliary relays. Note that Y000, Y001, Y002, and Y003 are devices that determine the pulse output destinations

Device number				Function	Attribute	Refer to
Y000	Y001	Y002	Y003*1			
M8029				"Instruction execution complete" flag	Read only	Subsection 4.4.2
M8329				"Instruction execution abnormal end" flag	Read only	Subsection 4.4.2
M8336*2				Interrupt input specification function enabled.*3	Drivable	Subsection 4.3.7
M8340	M8350	M8360	M8370	"Pulse output monitor" (BUSY/READY) flag	Read only	Subsection 4.4.3
M8343	M8353	M8363	M8373	Forward limit	Drivable	Subsection 4.3.1
M8344	M8354	M8364	M8374	Reverse limit	Drivable	Subsection 4.3.1
M8347	M8357	M8367	M8377	Interrupt signal logic reverse.*3*4	Drivable	Subsection 4.3.8
M8348	M8358	M8368	M8378	Positioning instruction activation	Read only	Subsection 4.4.4
M8349	M8359	M8369	M8379	Pulse output stop command.*3	Drivable	Subsection 4.3.2
M8460*5	M8461*5	M8462*5	M8463*5	User interrupt input command.*3	Drivable	Subsection 4.3.7
M8464*5	M8465*5	M8466*5	M8467*5	Clear signal device specification function enabled.*3	Drivable	Subsection 4.3.4

*1. Devices related to Y003 (pulse output destination) are valid only if two FX3U-2HSY-ADP adapters are connected to the FX3U PLC.

*2. This function will be valid if Ver.1.30 or later is used.

*3. Cleared when PLC switches from RUN to STOP.

*4. The logical NOT function will not be valid for the user interrupt input command device.

*5. This function will be valid if Ver.2.00 or later is used.

2. Special data registers

The following table shows the related special data registers. Note that Y000, Y001, Y002, and Y003 are devices that determine the pulse output destinations.

Device number								Function	Data length	Initial value	Refer to
Y000		Y001		Y002		Y003*1					
D8336*2								Specification of interrupt input.	16-bit	-	Subsection 4.3.7
D8340	Low-order	D8350	Low-order	D8360	Low-order	D8370	Low-order	Current value register (pls)	32-bit	0	Subsection 4.4.1
D8341	High-order	D8351	High-order	D8361	High-order	D8371	High-order				
D8342		D8352		D8362		D8372		Bias speed (Hz)	16-bit	0	Subsection 4.2.6
D8343	Low-order	D8353	Low-order	D8363	Low-order	D8373	Low-order	Maximum speed (Hz)	32-bit	100,000	Subsection 4.2.5
D8344	High-order	D8354	High-order	D8364	High-order	D8374	High-order				
D8348		D8358		D8368		D8378		Acceleration time (ms)	16-bit	100	Subsection 4.2.7
D8349		D8359		D8369		D8379		Deceleration time (ms)	16-bit	100	Subsection 4.2.8
D8464*3		D8465*3		D8466*3		D8467*3		Specifies the CLEAR signal device.	16-bit	-	Subsection 4.3.4

*1. Devices related to Y003 (pulse output destination) are valid only if two FX3U-2HSY-ADP adapters are connected to the FX3U PLC.

*2. This function will be valid if Ver.1.30 or later is used.
However, to specify the user interruption command device, Ver.2.00 or later should be used.

*3. This function will be valid if Ver.2.00 or later is used.

9.3 Function and Operation

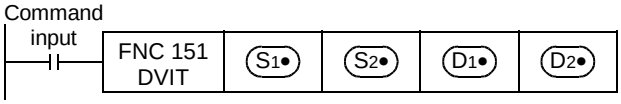

→ **For details on the maximum speed, bias speed,acceleration time, and deceleration time, refer to Subsection 4.2.5 to Subsection 4.2.8.**

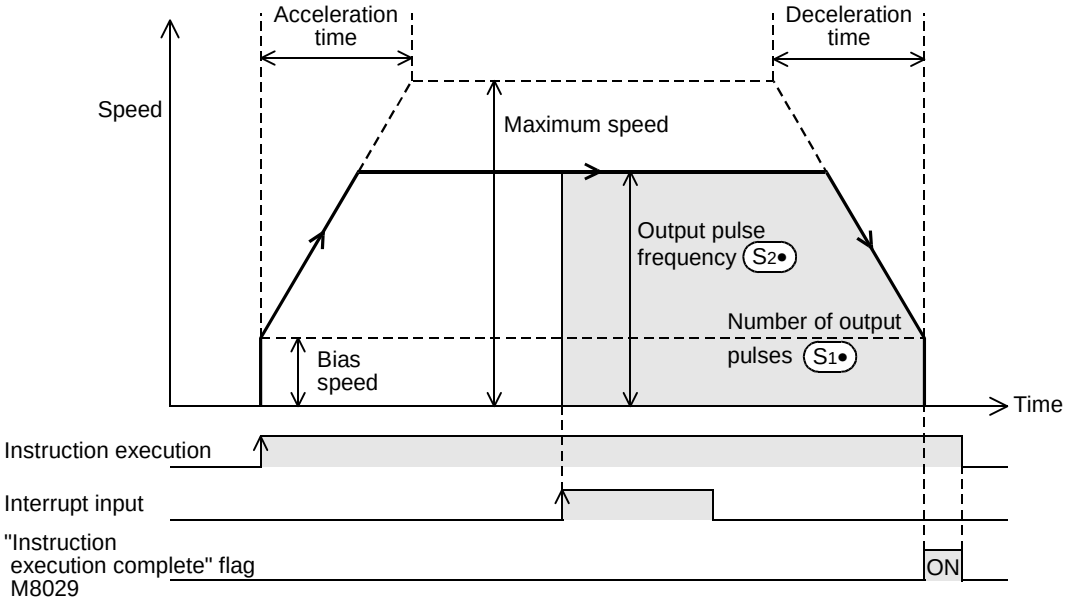

1) For S1•, specify the number of output pulses (relative address value).

	Setting range
16-bit operation	-32,768 to +32,767 (excluding 0)
32-bit operation	-999,999 to +999,999 (excluding 0)

2) For S2•, specify the output pulse frequency.

		Setting range
16-bit operation		10 to 32,767(Hz)
32-bit operation	When high-speed output special adapter is used	10 to 200,000(Hz)
	When transistor output of main unit is used	10 to 100,000(Hz)

3) For D1•, specify the pulse output number in the range of Y000 to Y003.

4) For D2•, specify the rotation direction signal output device number.
If the high-speed output special adapter is not used for the FX3U PLC, or if the FX3UC PLC is used, specify a transistor output number.
If the high-speed output special adapter is used for the FX3U PLC, specify the following output numbers.

High-speed output special adapter number	Pulse output destination device	Rotation direction output
The 1st adapter	D1• = Y000	D2• = Y004
	D1• = Y001	D2• = Y005
The 2nd adapter	D1• = Y002	D2• = Y006
	D1• = Y003	D2• = Y007

The rotation direction depends on the ON/OFF status of the specified device as shown in the following table.
During execution of this instruction, however, do not use the output specified by (D2•)

ON/OFF status of device specified by (D2•)	Rotation direction (increase/reduction of current value)
ON	If the number of pulses to be output after interruption (specified by (S1•)) is set to a positive number, the operation will be performed in the forward rotation direction. Forward rotation (Outputting the (D1•) pulse will increase the current value.)
OFF	If the number of pulses to be output after interruption (specified by (S1•)) is set to a negative number, the operation will be performed in the reverse rotation direction. Reverse rotation (Outputting the (D1•) pulse will reduce the current value.)

5) The interrupt input signal depends on the pulse output of (D1•) as shown in the following table.
Use the FX3UC PLC of Ver.1.30 or later to specify the interrupt input signal.
Use the FX3U/FX3UC PLC of Ver.2.00 or later to set the user interruption command device.

Pulse output destination device	Interrupt input signal	
	If it is not necessary to use the interrupt input designation function (M8336 = OFF), or if the FX3UC PLC of below Ver.1.30 is used	**If it is necessary to use the interrupt input designation function (M8336 = ON)**
(D1•) = Y000	X000	D8336=H○ ○ ○ ○ └ Interrupt input for Y000 (pulse output destination device) └ Interrupt input for Y001 (pulse output destination device) └ Interrupt input for Y002 (pulse output destination device) └ Interrupt input for Y003 (pulse output destination device)
(D1•) = Y001	X001	
(D1•) = Y002	X002	
(D1•) = Y003*1	X003	

*1. Y003 can be specified as the pulse output destination only if two FX3U-2HSY-ADP adapters are connected to the FX3U PLC.

Designation of interrupt input using M8336:

FX3UC Ver.1.30 ➡ FX3U Ver.2.00 ➡

1) Turn on the M8336.
2) Set the interrupt input number (X000 to X007) in the D8336, or specify the user interruption command device*1.

→ **For details on the designation method, refer to Subsection 4.3.7 or Subsection 4.5.1.**

D8336=H○ ○ ○ ○
└ Interrupt input for Y000 (pulse output destination device)
└ Interrupt input for Y001 (pulse output destination device)
└ Interrupt input for Y002 (pulse output destination device)
└ Interrupt input for Y003 (pulse output destination device)

Setting value	Description of setting
0	Specifies X000 for the interrupt input signal.
1	Specifies X001 for the interrupt input signal.
⋮	⋮
7	Specifies X007 for the interrupt input signal.

Setting value	Description of setting
8*1	Specifies a user interruption command device*1 for the interrupt input signal. FX3UC Ver.2.00 FX3U Ver.2.00 Pulse output destination device: Y000 → Pulse output destination device: M8460 Y001 → M8461 Y002 → M8462 Y003*2 → M8463
9 ~ E*3	Do not specify these values.
F*3	Set "F" for a pulse output destination device if the device is not used for the Interrupt Positioning (DVIT) instruction.

*1. The device can be specified if the FX3U/FX3UC PLC of Ver.2.00 or later is used.
Using the FX3UC PLC of below Ver.2.00, if "8" is set and then the specified Interrupt Positioning (DVIT) instruction turns ON, an operation error (error code: K6763) will occur, and the instruction will not cause any operation.

*2. Y003 can be specified as the pulse output destination only if two FX3U-2HSY-ADP adapters are connected to the FX3U PLC.

*3. After setting a number in the range of 9 to F for the interrupt input signal, if the corresponding Interrupt Positioning (DVIT) instruction turns ON, an operation error (error code: K6763) will occur, and the instruction will not cause any operation.

Example of program:
The following program shows that the interrupt input for Y000 is set in the user interruption command device (M8460).

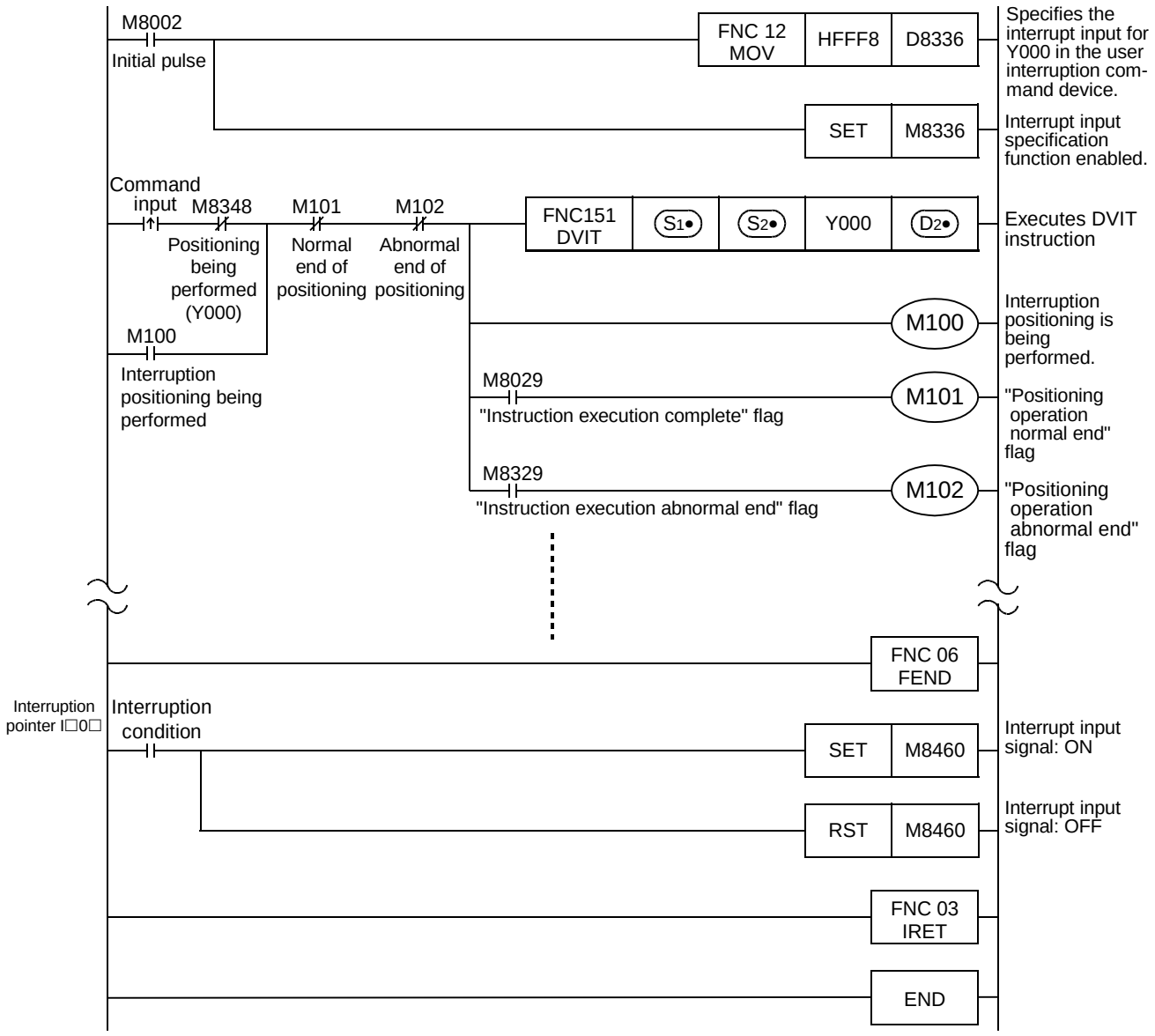

After specifying a user interruption command device for the interrupt input signal, if the specified device is turned on, the number of pulses specified by (S1•) will be output and then the operation will be stopped. Before activating the Interrupt Positioning instruction again, be sure to turn off the user interruption command device.

6) Interrupt input signal logical NOT
Turn on or off "Interrupt signal logic reverse" flag (see the following table) to specify the logic of this interrupt input signal. However, if the user interruption command device is set for the pulse output destination device, the interrupt input signal logical NOT function cannot be used.

Pulse output destination device	"Interrupt signal logic reverse" flag	Description
(D1•) = Y000	M8347	OFF: Positive logic (Turning on the input will turn on the interrupt input signal.) ON: Negative logic (Turning off the input will turn on the interrupt input signal.)
(D1•) = Y001	M8357	
(D1•) = Y002	M8367	
(D1•) = Y003*1	M8377	

*1. Y003 can be specified as the pulse output destination only if two FX3U-2HSY-ADP adapters are connected to the FX3U PLC.

1. Interruption positioning operation

Interruption positioning operation is described below assuming that Y000 is specified as the pulse output destination device by (D1•).
For this reason, if Y001, Y002, or Y003 is specified, it is necessary to change the output number of each related flag.

→ **For details on related flags, refer to Section 4.1 to Section 4.4, or Section 9.2.**

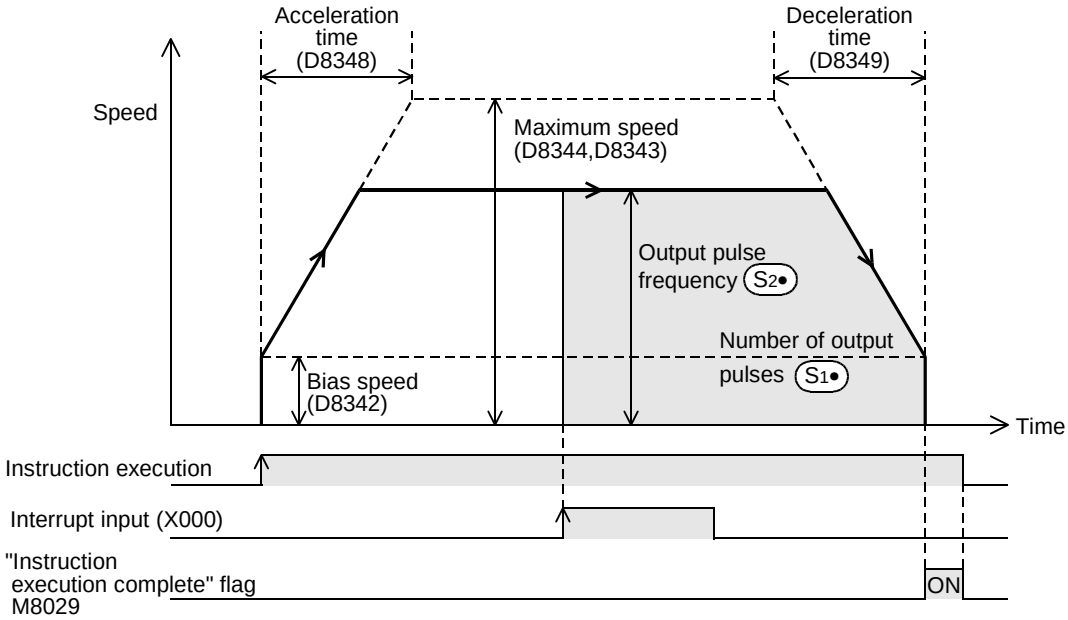

1) Execute the Interrupt Positioning (DVIT) instruction.
2) Transfer operation will be performed in the direction specified by the sign attached to the number of output pulses (specified by (S1•)) at the speed specified by the output pulse frequency (specified by (S2•)).
3) If interrupt input X000 is turned on, pulses will be output until the number of output pulses is increased to the number specified by (S1•), and then the operation will be stopped.
4) "Instruction execution complete" flag (M8029) will be turned on, and the interruption positioning operation will be completed.

→ **For details on "Instruction execution complete" flag, refer to Subsection 4.7.4.**

9.4 Important Points

→ **For details on the instruction activation timing, refer to Section 4.7.**

- If the number of pulses specified by (S1•) is not large enough to reduce the speed, the frequency will be reduced so that the speed can be reduced within the specified number of output pulses.

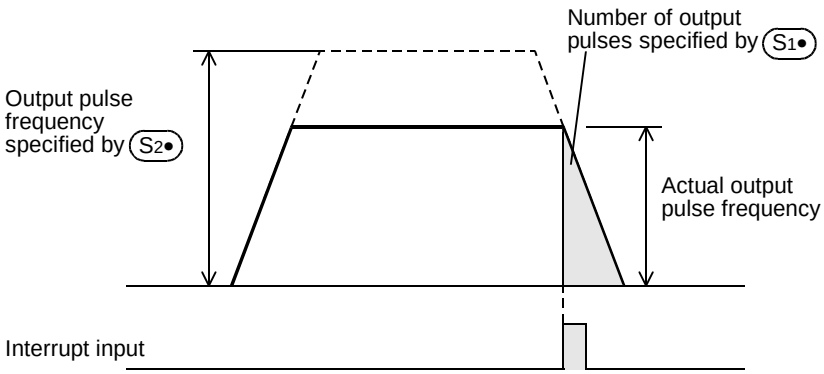

- If there is possibility that the interruption instruction is turned on during acceleration, specify the number of pulses so that the relation can be set to "number of output pulses ≥ number of pulses needed for acceleration + number of pulses needed for deceleration".
  If the relation is set to "number of output pulses < number of pulses needed for acceleration + number of pulses needed for deceleration", the operation will be as shown in the following figure:

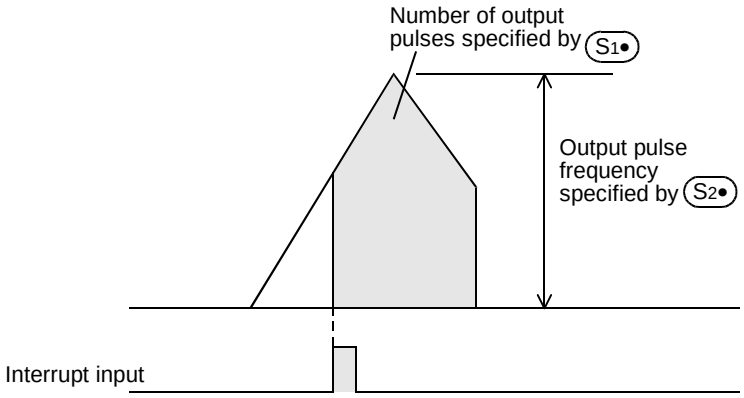

- If interrupt input turns ON before execution of the instruction, the operation will be performed in the same way as DRVI instruction.
- Even if the operand is subject to change during execution of the instruction, the operation will be continued while ignoring the change. To reflect the change on the operation, turn off the command contact of the instruction, and then turn it on again.
- If the instruction activation contact is turned off during operation, the speed will be reduced and then the operation will be stopped. In this case, "Instruction execution complete" flag (M8029) will not be turned on.
- Input the interruption signal before the number of output pulses is increased to 4,294,967,296. Only If the number of pulses is increased to 4,294,967,296 before inputting the interruption signal, will the operation be stopped, and "Instruction execution complete" flag (M8029) will be turned on.

→ **For details on "Instruction execution complete" flag, refer to Subsection 4.7.4.**

- If "pulse output monitor" (BUSY/READY) flag is on, the positioning instruction (including PLSR and PLSY) that uses the same output cannot be executed.
  After the instruction activation contact is turned off, if "pulse output monitor" (BUSY/READY) flag is still on, do not execute the positioning instruction (including PLSR and PLSY instructions) having the same output number.
- If the forward limit flag or the reverse limit flag in the operation direction is turned on, the speed will be reduced and then the operation will be stopped. In this case, "Instruction execution abnormal end" flag (M8329) will be turned on when completing execution of the instruction.

→ **For details on "Instruction execution abnormal end" flag, refer to Subsection 4.7.4.**

- The interrupt input cannot be used for the following items:
  Interrupt inputs can be specified in Ver.1.30 or later.
  - High-speed counter
  - Input interruption
  - Pulse catch
  - SPD instruction
  - DSZR instruction
  - ZRN instruction

10. Variable Speed Operation (Variable Speed Pulse Output)-PLSV Instruction

The built-in positioning function uses the variable speed pulse output (PLSV) instruction to perform variable speed operation. If the FX3U/FX3UC PLC of Ver.2.00 or later is used, this instruction can change the speed using the acceleration/deceleration speed.

10.1 Instruction Format

Outline:

This instruction is the variable speed pulse output instruction equipped with the rotation direction designation function.

→ **For the items to be observed in programming, refer to Section 4.7.**

1. Instruction Format

D	FNC 157 PLSV	PULSE V	16-bit instruction: 9 steps	Instruction symbol: PLSV / -	Execution condition: Continuous execution type
			32-bit instruction: 17 steps	Instruction symbol: DPLSV / -	Execution condition: Continuous execution type

2. Data setting

Operand type	Description	Data type
(S•)	Specifies the output pulse frequency designation device number.*1	BIN 16/32-bit
(D1•)	Specifies the pulse output device number.	bit
(D2•)	Specifies the rotation direction signal output destination device number.	bit

*1. Setting range : -32,768 Hz to -1 Hz and +1 Hz to 32,767 Hz for 16-bit operation. For the 32-bit operation, however, the setting range should be as shown in the following table.

Pulse output destination		Setting range
FX3U PLC	High-speed output special adapter	-200,000 to -1 to +1 to 200,000(Hz)
FX3UC PLC	Main unit	-100,000 to -1 to +1 to 100,000(Hz)

3. Devices

Operand type	Bit device							Word device												Others				
	System user							Digit designation				System user				Special unit	Index			Con-stantr		Real num-ber	Char-acter string	Pointer
	X	Y	M	T	C	S	D□.b	KnX	KnY	KnM	KnS	T	C	D	R	U□\G□	V	Z	Modfy	K	H	E	"□"	P
(S•)								✓	✓	✓	✓	✓	✓	✓	✓	✓	✓	✓	✓	✓	✓			
(D1•)		▲1																	✓					
(D2•)		▲2	✓			✓	▲3												✓					

▲1 : Specify Y000, Y001, or Y002 transistor output of the main unit, or specify Y000, Y001, Y002*2, or Y003*2 of the high-speed output special adapter*1.

*1. High-speed input/output special adapter cannot be connected to FX3UC-32MT-LT.

*2. To use Y002 and Y003 of the high-speed output special adapter, connect the second high-speed output special adapter.

Point:

- To use the FX3U Series main unit of relay output type, be sure to connect the high-speed output special adapter. The differential line drive will be used for the outputs of the high-speed output special adapter.

▲2 : If the high-speed output special adapter is not used for the FX3U PLC, or if the FX3UC PLC is used, specify a transistor output number. If the high-speed output special adapter is used for the FX3U PLC, specify the following output numbers.

High-speed output special adapter connection position	Pulse output	Rotation direction output
The 1st adapter	D1• = Y000	D2• = Y004
	D1• = Y001	D2• = Y005
The 2nd adapter	D1• = Y002	D2• = Y006
	D1• = Y003	D2• = Y007

▲3 : The D□.b cannot be indexed by index registers (V and Z).

10.2 List of Related Devices

1. Special auxiliary relays

The following table shows the related special auxiliary relays. Note that Y000, Y001, Y002, and Y003 are devices that determine the pulse output destinations.

Device number				Function	Attribute	Refer to
Y000	Y001	Y002	Y003*1			
M8029				"Instruction execution complete" flag	Read only	Subsection 4.4.2
M8329				"Instruction execution abnormal end" flag	Read only	Subsection 4.4.2
M8338*2				Acceleration/deceleration*3	Drivable	Subsection 4.3.9
M8340	M8350	M8360	M8370	"Pulse output monitor" (BUSY/READY) flag	Read only	Subsection 4.4.3
M8342	M8352	M8362	M8372	Zero return direction specification.*3	Drivable	Subsection 4.3.3
M8343	M8353	M8363	M8373	Forward limit	Drivable	Subsection 4.3.1
M8344	M8354	M8364	M8374	Reverse limit	Drivable	Subsection 4.3.1
M8348	M8358	M8368	M8378	Positioning instruction activation.	Read only	Subsection 4.4.4

*1. Devices related to Y003 (pulse output destination) are valid only if two FX3U-2HSY-ADP adapters are connected to the FX3U PLC.

*2. This function will be valid if Ver.2.00 or later is used.

*3. Cleared when PLC switches from RUN to STOP.

2. Special data registers

The following table shows the related special data registers. Note that Y000, Y001, Y002, and Y003 are devices that determine the pulse output destinations.

Device number								Function	Data length	Initial value	Refer to
Y000		Y001		Y002		Y003*1					
D8340	Low-order	D8350	Low-order	D8360	Low-order	D8370	Low-order	Current value register (pls)	32-bit	0	Subsection 4.4.1
D8341	High-order	D8351	High-order	D8361	High-order	D8371	High-order				
D8342		D8352		D8362		D8372		Bias speed (Hz)	16-bit	0	Subsection 4.2.6
D8343	Low-order	D8353	Low-order	D8363	Low-order	D8373	Low-order	Maximum speed (Hz)	32-bit	100,000	Subsection 4.2.5
D8344	High-order	D8354	High-order	D8364	High-order	D8374	High-order				
D8348		D8358		D8368		D8378		Acceleration time (ms)*2	16-bit	100	Subsection 4.2.7
D8349		D8359		D8369		D8379		Deceleration time (ms)*2	16-bit	100	Subsection 4.2.8

*1. Devices related to Y003 (pulse output destination) are valid only if two FX3U-2HSY-ADP adapters are connected to the FX3U PLC.

*2. This function will be valid if PLSV instruction turns ON during acceleration/deceleration using Ver.2.00 or later.

10.3 Function and Operation

This instruction is the variable speed pulse output instruction equipped with the rotation direction designation function.
The acceleration/deceleration function is adopted for the variable speed pulse output (PLSV) instruction. So it is possible to specify whether acceleration/deceleration should be performed.
If the FX3UC PLC of below Ver.2.00 is used, operation will be performed without acceleration/deceleration.

10.3.1 Operation without Acceleration/Deceleration (M8338 = OFF)

After turning off the acceleration/deceleration function (M8338), if the output pulse frequency (S·) value is changed, the variable speed pulse output (PLSV) instruction will change the output frequency without acceleration/deceleration.

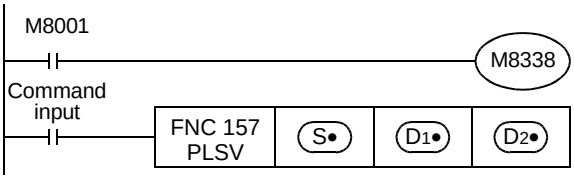

→ **For details on the maximum speed and bias speed, refer to Subsection 4.2.5 and Subsection 4.2.6.**

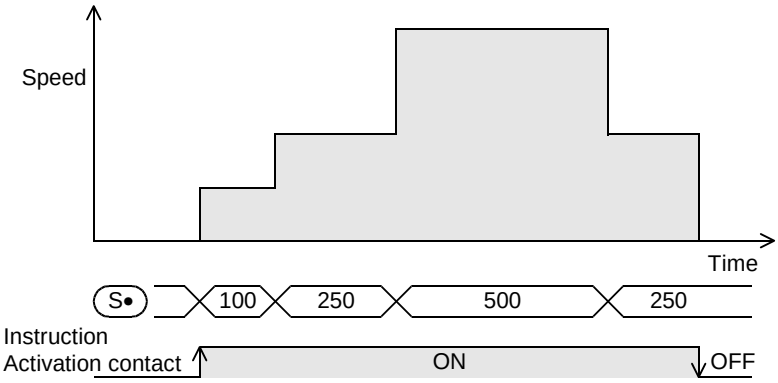

1) For (S·), specify the output pulse frequency.
Even if pulses are being output, the output pulse frequency (S·) can be changed freely.
Acceleration/deceleration, however, will not be performed.

		Setting range
16-bit operation		-32,768 to -1 Hz, 1 to 32,767 Hz
32-bit operation	When high-speed output special adapter is used	-200,000 to -1 Hz, 1 to 200,000 Hz
	When transistor output of main unit is used	-100,000 to -1 Hz, 1 to 100,000 Hz

2) For (D1·), specify the pulse output number in the range of Y000 to Y003.

3) For (D2·), specify the rotation direction signal output device number.
If the high-speed output special adapter is not used for the FX3U PLC, or if the FX3UC PLC is used, specify a transistor output number.
If the high-speed output special adapter is used for the FX3U PLC, specify the following output numbers.

High-speed output special adapter number	Pulse output destination device	Rotation direction output
The 1st adapter	(D1·) = Y000	(D2·) = Y004
	(D1·) = Y001	(D2·) = Y005
The 2nd adapter	(D1·) = Y002	(D2·) = Y006
	(D1·) = Y003	(D2·) = Y007

The rotation direction depends on the ON/OFF status of the specified device as shown in the following table.
During execution of this instruction, however, do not use the output specified by (D2•).

ON/OFF status of device specified by	Rotation direction (increase/reduction of current value)
ON	If the number of output pulses specified by (S•) is a positive number, the operation will be performed in the forward rotation direction. Forward rotation (Outputting the (D1•) pulse will increase the current value.)
OFF	If the number of output pulses specified by (S•) is a negative number, the operation will be performed in the reverse rotation direction. Reverse rotation (Outputting the (D1•) pulse will reduce the current value.)

10.3.2 Operation with Acceleration/Deceleration (M8338 = ON)

After turning on the acceleration/deceleration function (M8338), if the output pulse frequency (S•) value is changed, acceleration or deceleration will be performed first, and then the variable speed pulse output (PLSV) instruction will change the output frequency.
If the FX3UC PLC of below Ver.2.00 is used, operation will be performed without acceleration/deceleration.

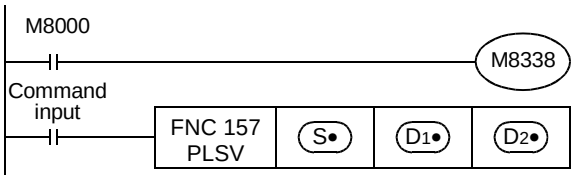

→ **For details on the maximum speed, bias speed, acceleration time, and deceleration time, refer to Subsection 4.2.5 to Subsection 4.2.8.**

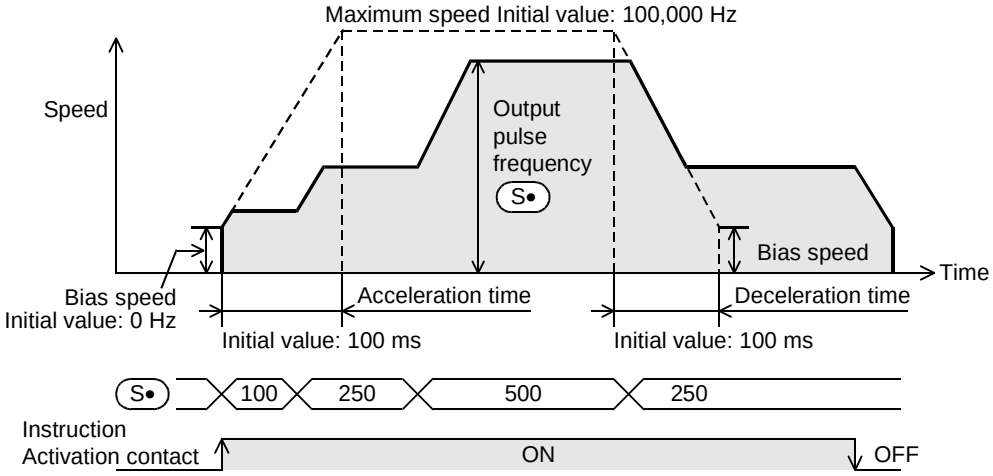

1) For (S•), specify the output pulse frequency.
Even if pulses are being output, the output pulse frequency (S•) can be changed freely. Acceleration/deceleration, however, will not be performed.

		Setting range
16-bit operation		-32,768 to -1 Hz, 1 to 32,767 Hz
32-bit operation	When high-speed output special adapter is used	-200,000 to -1 Hz, 1 to 200,000 Hz
	When transistor output of main unit is used	-100,000 to -1 Hz, 1 to 100,000 Hz

2) For (D1•), specify the pulse output number in the range of Y000 to Y003.

3) For (D2•), specify the rotation direction signal output device number.
If the high-speed output special adapter is not used for the FX3U PLC, or if the FX3UC PLC is used, specify a transistor output number.
If the high-speed output special adapter is used for the FX3U PLC, specify the following output numbers.

High-speed output special adapter number	Pulse output destination device	Rotation direction output
The 1st adapter	(D1•) = Y000	(D2•) = Y004
	(D1•) = Y001	(D2•) = Y005
The 2nd adapter	(D1•) = Y002	(D2•) = Y006
	(D1•) = Y003	(D2•) = Y007

The rotation direction depends on the ON/OFF status of the specified device as shown in the following table.
During execution of this instruction, however, do not use the output specified by (D2•).

ON/OFF status of device specified by (D2•)	Rotation direction (increase/reduction of current value)
ON	If the number of output pulses specified by (S•) is a positive number, the operation will be performed in the forward rotation direction. Forward rotation (Outputting the (D1•) pulse will increase the current value.)
OFF	If the number of output pulses specified by (S•) is a negative number, the operation will be performed in the reverse rotation direction. Reverse rotation (Outputting the (D1•) pulse will reduce the current value.)

10.4 Important Points

→ **For the important points of programming, refer to Section 4.7.**

- During pulse output operation, if the output pulse frequency (S·) is changed to "K0", the PLC will reduce the speed and then stop the pulse outputting operation if the acceleration/deceleration function turns ON. However, if the acceleration/deceleration function is not activated, the PLC will immediately stop the pulse outputting operation.
  Before outputting the pulses again, check that "pulse output monitor" (BUSY/READY) flag is off, and then wait until 1 or more cycles of operation have been completed. After that, set (change) the output pulse frequency to a value other than "K0".
- During pulse outputting operation, do not change the sign attached to the output pulse frequency value (S·).
  If it is necessary to change the sign, stop the servo motor first by setting the output pulse frequency value (S·) to "K0". After checking stop of the servo motor using the SERVO READY signal, change the sign attached to the output pulse frequency value (S·).
  If the sign attached to the output pulse frequency value (S·) is changed during pulse outputting operation, the operation may be changed as follows, and the machine, therefore, may be damaged:
  1) The pulse outputting operation may be stopped.
  2) "Pulse output monitor" (BUSY/READY) flag may be turned off.
     (The pulse outputting operation may be stopped, but the motor may not be stopped immediately.)
  3) Operation may be performed in the specified direction at the frequency specified by the output pulse frequency value (S·).
- If the acceleration/deceleration function turns ON, turning off the instruction activation contact during pulse outputting operation will reduce the speed first and then stop the operation. If the acceleration/deceleration function is not activated, turning off the instruction activation contact during pulse outputting operation will immediately stop the operation. In this case, "Instruction execution complete" flag (M8029) will not be turned on.
- If the limit flag (forward limit flag or reverse rotation limit flag) in the operation direction is turned on, the operation will be immediately stopped. In this case, "Instruction execution abnormal end" flag (M8329) will be turned on when completing execution of the instruction.
  → **For details on "Instruction execution abnormal end" flag, refer to Subsection 4.7.4.**
- If "pulse output monitor" (BUSY/READY) flag is on, the positioning instruction (including PLSR and PLSY) that uses the same output cannot be executed.
  After the instruction activation contact is turned off, if "pulse output monitor" (BUSY/READY) flag is still on, do not execute the positioning instruction (including PLSR and PLSY instructions) having the same output number.
- After executing the instruction, the output of the rotation direction signal will be turned off.

1. Important items for FX3UC PLC of below Ver.2.00

FX3UC Ver.2.00

- Acceleration/deceleration will not be performed at starting or stopping operation. For this reason, if it is necessary to use the cushion start function or the cushion stop function, increase or reduce the output pulse frequency value (S·) using FNC67 (RAMP) instruction, etc.

2. Important items for FX3U/FX3UC PLC of Ver.2.00 or later

FX3UC Ver.2.00 FX3U Ver.2.00

- If acceleration/deceleration is enabled, the variable speed pulse output (PLSV) instructions of all the pulse output destination devices will accelerate/decelerate the operation. This means that acceleration/deceleration cannot be specified for each pulse output destination device.

11. Batch Data Positioning Mode (TBL Instruction)

If GX Developer Ver.8.23Z or later is used, the positioning instructions shown below can be preliminarily set in the positioning tables. After that, if a table is specified, the positioning operation of the specified table will be performed.

FX3UC Ver.2.00 FX3U Ver.2.00

Instruction	Description	
DVIT(FNC151)	One-speed interrupt constant quantity feed (Interrupt positioning)	
PLSV(FNC157)	Variable speed operation (Variable Speed Pulse Output)	
DRVI(FNC158)	1-speed positioning	Drive to Increment
DRVA(FNC159)		Drive to Absolute

11.1 Instruction Format

1. Instruction Format

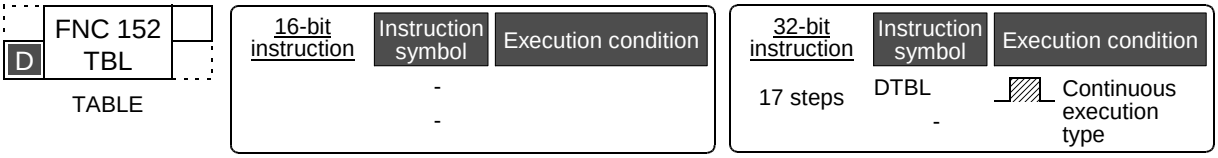

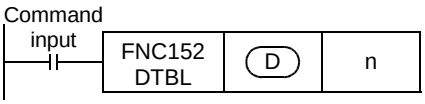

2. Data setting

Operand type	Description	Data type
(D)	Specifies the pulse output number.	Bit
n	Specifies the table number (1 to 100) to be executed.	BIN 32-bit

3. Devices

Operand type	Bit device							Word device												Others				
	System user							Digit designation				System user				Special unit	Index			Con-stantr		Real num-ber	Char-acter string	Pointer
	X	Y	M	T	C	S	D□.b	KnX	KnY	KnM	KnS	T	C	D	R	U□\G□	V	Z	Modify	K	H	E	"□"	P
(D)		▲1																						
n																				✓	✓			

▲1 : Specify Y000, Y001, or Y002 transistor output of main unit, or specify Y000, Y001, Y002*2, or Y003*2 of the high-speed output special adapter*1.

*1. High-speed input/output special adapter cannot be connected to FX3UC-32MT-LT.

*2. To use Y002 and Y003 of the high-speed output special adapter, connect the second high-speed output special adapter.

Point:

To use the FX3U Series main unit of relay output type, be sure to connect the high-speed output special adapter. The differential line drive will be used for the outputs of the high-speed output special adapter.

11.2 List of Related Devices

1. Special auxiliary relays

The following table shows the related special auxiliary relays. Note that Y000, Y001, Y002, and Y003 are devices that determine the pulse output destinations.

Device number				Function	Attribute	Refer to
Y000	Y001	Y002	Y003*1			
M8029				"Instruction execution complete" flag	Read only	Subsection 4.4.2
M8329				"Instruction execution abnormal end" flag	Read only	Subsection 4.4.2
M8338*2				Acceleration/deceleration operation.*3	Drivable	Subsection 4.3.9
M8336*4				Interrupt input specification function enabled.*3	Drivable	Subsection 4.3.7
M8340	M8350	M8360	M8370	"Pulse output monitor"(BUSY/READY) flag	Read only	Subsection 4.4.3
M8343	M8353	M8363	M8373	Forward limit	Drivable	Subsection 4.3.1
M8344	M8354	M8364	M8374	Reverse limit	Drivable	Subsection 4.3.1
M8347	M8357	M8367	M8377	Interrupt signal logic reverse.*3, *5	Drivable	Subsection 4.3.8
M8348	M8358	M8368	M8378	Positioning instruction activation.	Read only	Subsection 4.4.4
M8349	M8359	M8369	M8379	Pulse output stop command.*3	Drivable	Subsection 4.3.2
M8460*2	M8461*2	M8462*2	M8463*2	User interrupt input command.*3	Drivable	Subsection 4.3.7

*1. Devices related to Y003 (pulse output destination) are valid only if two FX3U-2HSY-ADP adapters are connected to the FX3U PLC.

*2. This function will be valid if Ver.2.00 or later is used.

*3. Cleaned when PLC switches from RUN to STOP.

*4. This function will be valid if Ver.1.30 or later is used.

*5. The logical NOT function will not be valid for the user interrupt input command device.

2. Special data registers

The following table shows the related special data registers. Note that Y000, Y001, Y002, and Y003 are devices that determine the pulse output destinations. To set the constants shown in the shaded area, set the positioning parameters.

→ **For details on the positioning parameters, refer to Section 11.4.**

Device number								Function	Data length	Initial value	Refer to
Y000		Y001		Y002		Y003*1					
D8336*2								**Specification of interrupt input.**	16-bit	-	Subsection 4.3.7
D8340	Low-order	D8350	Low-order	D8360	Low-order	D8370	Low-order	Current value register (pls)	32-bit	0	Subsection 4.4.1
D8341	High-order	D8351	High-order	D8361	High-order	D8371	High-order				
D8342		D8352		D8362		D8372		**Bias speed (Hz)**	16-bit	0	Subsection 4.2.6
D8343	Low-order	D8353	Low-order	D8363	Low-order	D8373	Low-order	**Maximum speed (Hz)**	32-bit	100,000	Subsection 4.2.5
D8344	High-order	D8354	High-order	D8364	High-order	D8374	High-order				
D8345		D8355		D8365		D8375		**Creep speed (Hz)**	16-bit	1000	Subsection 4.2.4
D8346	Low-order	D8356	Low-order	D8366	Low-order	D8376	Low-order	**Zero return speed (Hz)**	32-bit	50,000	Subsection 4.2.3
D8347	High-order	D8357	High-order	D8367	High-order	D8377	High-order				
D8348		D8358		D8368		D8378		**Acceleration time (ms)*2**	16-bit	100	Subsection 4.2.7
D8349		D8359		D8369		D8379		**Deceleration time (ms)*2**	16-bit	100	Subsection 4.2.8

*1. Devices related to Y003 (pulse output destination) are valid only if two FX3U-2HSY-ADP adapters are connected to the FX3U PLC.

*2. This function will be valid if Ver.1.30 or later is used.
However, the user interruption command device can be specified only if Ver.2.00 or later is used.

*3. This function will be valid if PLSV instruction turns ON during acceleration/deceleration using Ver.2.00 or later.

11.3 Function and Operation

Preliminarily set the positioning parameters using GX Developer, and then specify the pulse output destination (D) and the positioning table number (n) for DTBL instruction to carry out positioning.
Use GX Developer of Ver.8.23Z or later to set the positioning parameters.
"Number of pulses" and "frequency" set by positioning parameters in each positioning table can be changed using the program, display module, or indicator.

→ **For details on positioning parameters, refer to Section 11.4.**

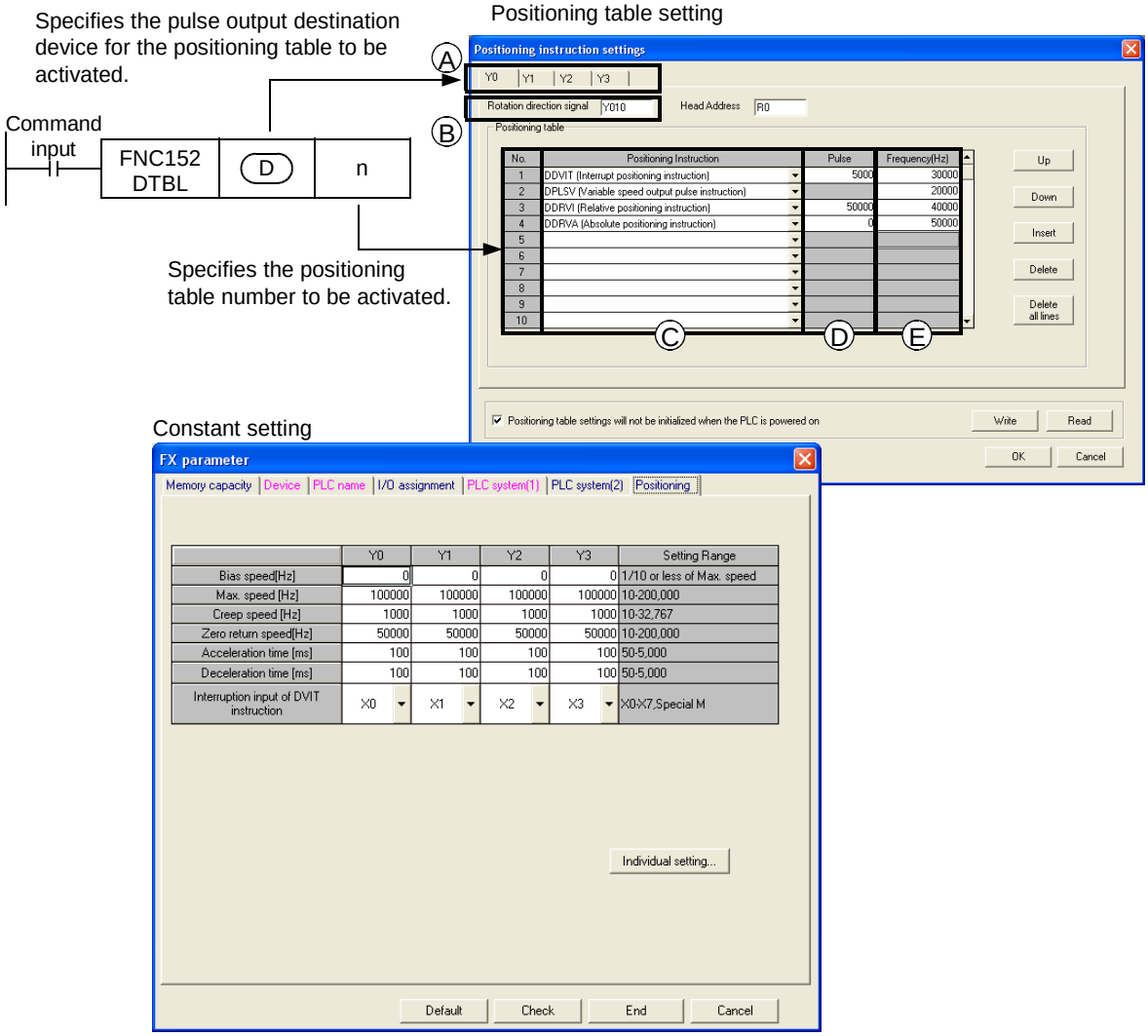

As shown in the following table, each positioning instruction consists of the positioning type (4 types in total), number of pulses (pls), frequency (Hz), etc.
For further information on the operation of each instruction, refer to the description of each instruction.

Positioning type (C)	Instruction to be activated and its operand					Refer to
	Instruction word	Operand				
		(D) Number of output pulses	(E) Output pulse frequency	(A) Pulse output destination device	(B) Rotation direction signal	
DDVIT(Interrupt Positioning)	DDVIT	(S1•)	(S2•)	(D1•)	(D2•)	Chapter 9
DPLSV(Variable Speed Pulse Output)	DPLSV	–	(S•)	(D1•)	(D2•)	Chapter 10
DDRVI(Drive to Increment)	DDRVI	(S1•)	(S2•)	(D1•)	(D2•)	Section 8.2
DDRVA(Drive to Absolute)	DDRVA	(S1•)	(S2•)	(D1•)	(D2•)	Section 8.3

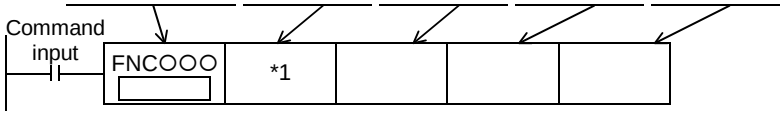

*1 PLSV(FNC157) has only 3 operands. It has no operand of number of output pulses.

11.4 Positioning Parameter Setting

Use GX Developer of Ver.8.23Z or later to set the positioning parameters.
"Number of pulses" and "frequency" set by positioning parameters in a positioning table can be changed using the program, display module, or indicator.

→ **To change the set "number of pulses" or "frequency", refer to Subsection 11.4.2.**

11.4.1 Positioning Parameter Setting Using GX Developer

Assuming that GX Developer of Ver.8.23Z is used, this section describes how to set the positioning parameter.

1 Open "parameter setting" window.

On the project tree displayed on the left side of the screen, double-click "Parameter" and then "PLC Parameter".
If the project tree is not displayed, click "View" on the menu bar, and then click "Project data list"

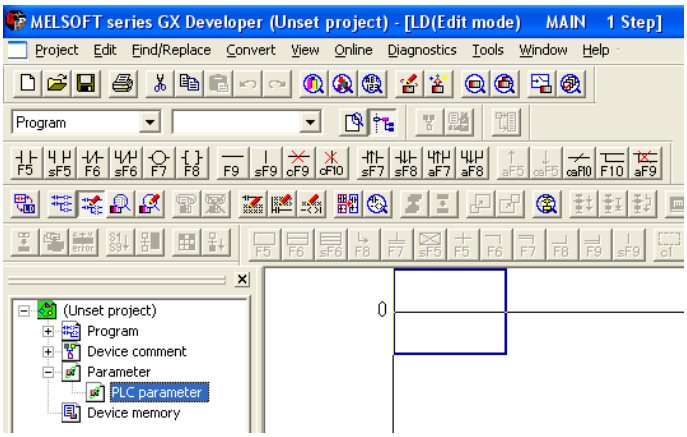

2 Set the memory capacity.

Click "Memory capacity" tab, and then click "Positioning Instruction Setting" check box to enter a check in the box.

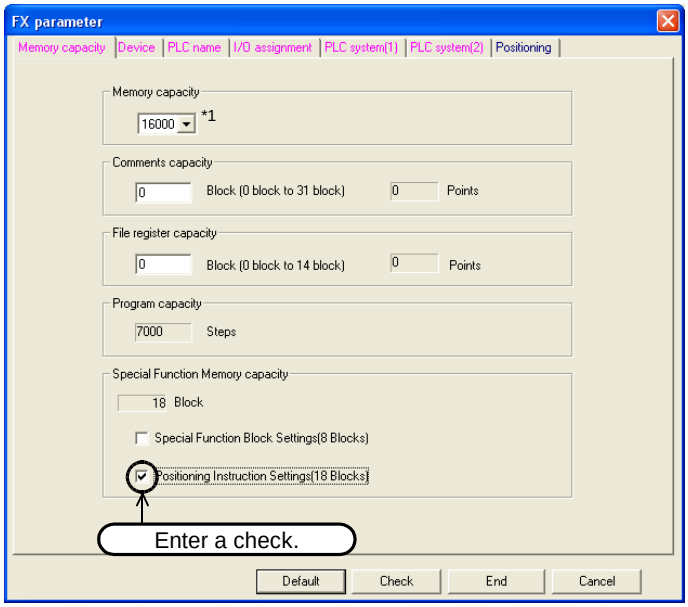

Setting item	Description of setting	Setting range
Memory capacity	Set the capacity of the program memory. Initial value: 16000*1	Refer to the programming manual.
Comment capacity	Set the capacity for the comments to be stored in the PLC. Initial value: 0 Device comment: 50 points/block (500 steps)	
File register capacity	Set the capacity for the file registers. Initial value: 0 File registers: 500 points/block (500 steps)	
Program capacity	Displays the number of steps that can be used for the sequence programs.	
Special Function Memory capacity	Set whether the special unit initial data setting function and the positioning data setting function should be enabled.	-
Special Function Block Settings	Enter a check in the check box to enable the special functioin unit/ block initial data setting function. Use "I/O Assignment Setting" tab to set the initial value of a special unit.	-
Positioning Instruction settings	Enter a check in the check box to enable TBL (FNC152) instruction setting function. Use "Positioning Data Setting" tab to set the positioning data.	-

*1. The initial value is 8000 steps for GX Developer of below Ver.8.22Y.

3 Set the positioning data.

Positioning data can be set if the FX3U/FX3UC PLC of Ver.2.00 or later is used.

1. Click "Positioning" tab.

On "Memory Capacity" tab, preliminarily enter a check in "Positioning Instruction Setting" check box to set the positioning data setting table on "Positioning" tab.

2. Set the positioning constants to be used for TBL (FNC152) instruction.

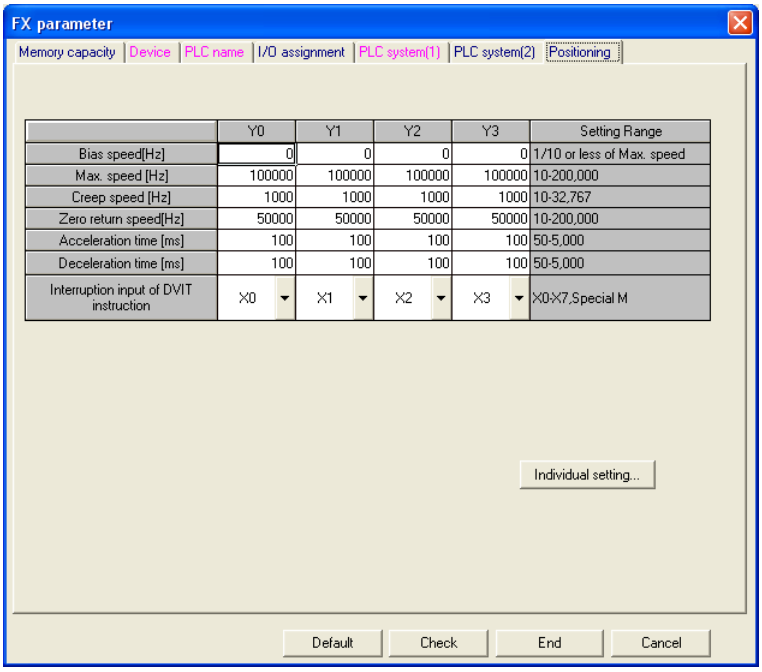

Setting item	Description of setting	Setting range
Bias speed (Hz)	Sets the bias speed for each pulse output number. Initial value: 0	1/10 or less of maximum speed
Maximum speed (Hz)	Sets the maximum speed for each pulse output number. Initial value: 100000	*1
Creep speed (Hz)	Sets the creep speed of DSZR (FNC150) instruction for each pulse output number. Initial value: 1000	10 to 32767*2
Zero return speed (Hz)	Sets the zero return speed of DSZR (FNC150) instruction for each pulse output number. Initial value: 50000	*1
Acceleration time (ms)	Sets the acceleration time for each pulse output number. Initial value: 100	50 to 5000
Deceleration time (ms)	Sets the deceleration time for each pulse output number. Initial value: 100	50 to 5000
Interrupt input of DVIT instruction	Sets the interrupt input*3 for each pulse output number to activate DVIT (FNC151) instruction. If a pulse output destination device does not use DVIT instruction, specify a user interruption command device (M). Initial setting: Setting range Y000 (pulse output destination): X000 X000 to X007, M8460 Y001 (pulse output destination): X001 X000 to X007, M8461 Y002 (pulse output destination): X002 X000 to X007, M8462 Y003*4 (pulse output destination): X003 X000 to X007, M8463	Shown on left side
Y0	Sets data in this area if Y000 is specified as the pulse output destination device.	-
Y1	Sets data in this area if Y001 is specified as the pulse output destination device.	-
Y2	Sets data in this area if Y002 is specified as the pulse output destination device.	-
Y3*4	Sets data in this area if Y003 is specified as the pulse output destination device.	-
Individual setting	Displays "Individual Setting" window for TBL (FNC152) instruction table setting. **→For details on data setting, refer to the next page.**	-

*1. If the FX3UC PLC is used, the setting range will be 10 to 100000 Hz.
If the FX3U PLC is used, and if the pulse output destination is FX3U-2HSY-ADP, the setting range will be 10 to 200000 Hz.

*2. Set the creep speed so that the relation with the other speeds can be set to "bias speed ≤ creep speed ≤ maximum speed."

*3. The set interrupt input cannot be commonly used for the high-speed counter, input interruption, pulse catch input, input of SPD (FNC67) instruction, and other interrupt inputs of DVIT (FNC151) instruction.

*4. If the FX3UC PLC is used, this item cannot be set. Note that this item can be set only if two FX3U-2HSY-ADP adapters are connected to the FX3U PLC.

3. Click "Individual Setting" button to display "Positioning instruction setting" window. In this window, set the positioning table of each pulse output destination device.

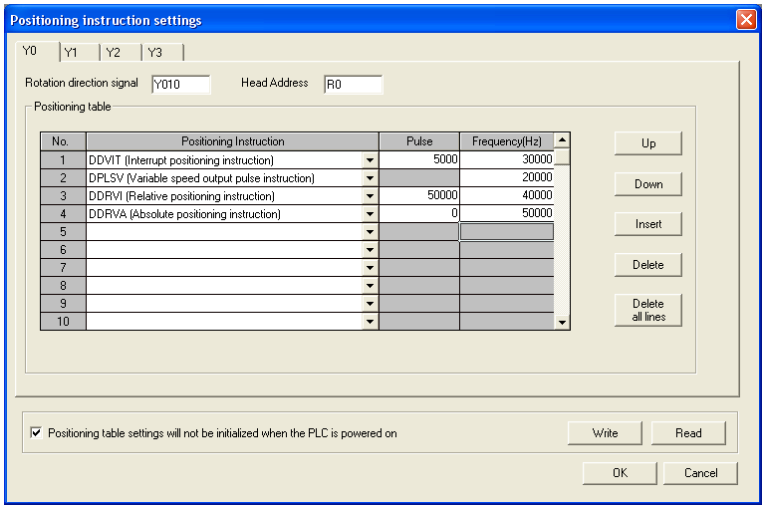

Setting item	Description of setting	Setting range
Y0	Click this tab to set the positioning table for Y000 (pulse output destination).	-
Y1	Click this tab to set the positioning table for Y001 (pulse output destination).	-
Y2	Click this tab to set the positioning table for Y002 (pulse output destination).	-
Y3*1	Click this tab to set the positioning table for Y003 (pulse output destination).	-
Rotation direction signal	Set the rotation direction output number.*2 Initial setting: Y010 for Y000 (pulse output destination) Y011 for Y001 (pulse output destination) Y012 for Y002 (pulse output destination) Y013 for Y003 (pulse output destination)*1	Y000 to Y357 M0 to M7679 S0 to S4095
Head Address	Set the first device number to store the set data (number of pulses, frequency). Starting from the set device, 1600 points will be occupied. Initial setting: R0	D0 to D6400 R0 to R31168
No.	Table number Data can be set for tables 1 to 100.	-
Positioning Instruction	Select a positioning type from the following types: DDVIT (Interrupt positioning), DPLSV (Variable Speed Pulse Output), DDRVI (Drive to Increment), DDRVA (Drive to Absolute)	-
Pulse	Set the number of pulses to be output to perform the specified type of positioning operation (instruction).	*3
Frequency (Hz)	Set the speed (output pulse frequency) to perform the specified type of positioning operation (instruction).	
"Up" button	Click this button to move up the cursor by 1 line (to select the line just later the cursor-positioned line).	-
"Down" button	Click this button to move down the cursor by 1 line (to select the line just below the cursor-positioned line).	-
"Insert" button	Click this button to insert a line at the specified position.	-
"Delete" button	Click this button to delete the selected line.	-
"Delete All" button	Click this button to delete all the data from the positioning table of the selected pulse output destination device.	-

Setting item		Description of setting	Setting range
Positioning table setting will not be initialized when the PLC is powered on		If this check box is checked, the positioning data will not be initialized at turning on the power of the PLC. Enter a check in this check box to retain the changed data ("pulses" and "frequency" changed by the program, display module, or indicator) even after power-off and to use the changed data after turning on the power again. To use this function, set an uninterruptible power supply type device as the first device.	-
	"Write" button	Click this button to write 1600 points of data ("pulses" and "frequency" set on the positioning table using GX Developer) starting from the first device of the PLC.	-
	"Read" button	Click this button to read out 1600 points of data ("pulses" and "frequency" set on the positioning table currently used) from the PLC starting from the first device. At the completion of data reading, the data numbers will appear only if "Positioning Instruction" is set for the data.	-

*1. If the FX3UC PLC is used, this item cannot be set. Note that this item can be set only if two FX3U-2HSY-ADP adapters are connected to the FX3U PLC.

*2. To use FX3U-2HSY-ADP, set the rotation direction signal depending on the pulse output destination device as shown in the following table.

Pulse output destination device	Rotation direction signal
Y000	Y004
Y001	Y005
Y002	Y006
Y003	Y007

*3. Refer to the description of the selected instruction (positioning type).

Positioning type	Refer to
DDVIT (Interrupt positioning)	Chapter 9
DPLSV (Variable Speed Pulse Output)	Chapter 10
DDRVI (Drive to Increment)	Section 8.2
DDRVA (Drive to Absolute)	Section 8.3

4 Transfer the parameters (+ sequence program) to the PLC.

1. Select "Online" from the tool menu, and then select "Write to PLC". "Write to PLC" window will appear.

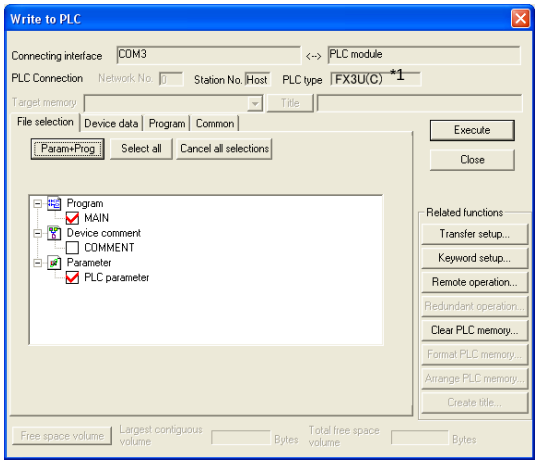

*1. Depending on the version of GX Developer, the PC type may be set to"FX3UC".

2. Enter a check in "PLC parameter" check box, and then click "Execute" button.

The selected parameter data will be transferred to the PLC. When the PLC is started (enters the RUN mode), the transferred parameter data will be enabled. If the communication conditions set on "PLC system(2)" screen are changed, be sure to turn off the power of the PLC, and then turn it on again.

11.4.2 Changing of Set Positioning Parameters (Number of Pulses and Frequency)

"Pulses" and "frequency" set by positioning parameters in a positioning table will be stored in the devices starting from the specified first device as shown below. The set "pulses" and "frequency" can be changed using the display module or the indicator.

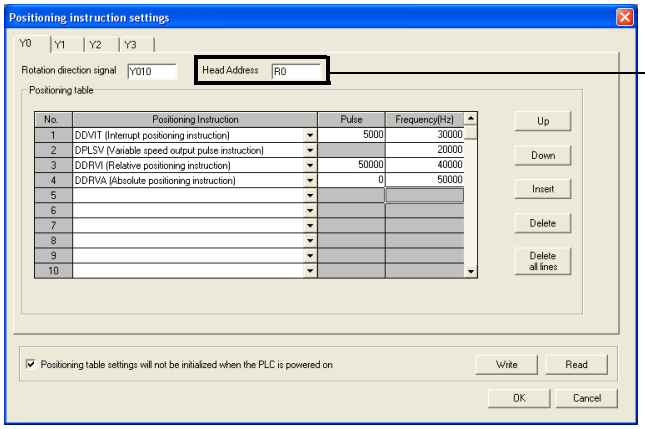

If the Head Address is set to "R0":

Pulse output destination device	Positioning table No.	Number of pulses	Frequency
Y000	1	R1,R0	R3,R2
	2	R5,R4	R7,R6
	3	R9,R8	R11,R10
	⋮	⋮	⋮
	100	R397,R396	R399,R398
Y001	1	R401,R400	R403,R402
	2	R405,R404	R407,R406
	3	R409,R408	R411,R410
	⋮	⋮	⋮
	100	R797,R796	R799,R798
Y002	1	R801,R800	R803,R802
	2	R805,R804	R807,R806
	3	R809,R808	R811,R810
	⋮	⋮	⋮
	100	R1197,R1196	R1199,R1198
Y003	1	R1201,R1200	R1203,R1202
	2	R1205,R1204	R1207,R1206
	3	R1209,R1208	R1211,R1210
	⋮	⋮	⋮
	100	R1597,R1596	R1599,R1598

Caution:

If "positioning type" is set to "DPLSV (Variable Speed Pulse Output)", "frequency (Hz)" value set on the screen will be stored as the set number of pulses, and the device for "frequency" will be "K0".

To use "pulses" and "frequency" changed by the display module or the indicator even after turning off and then on the power again:

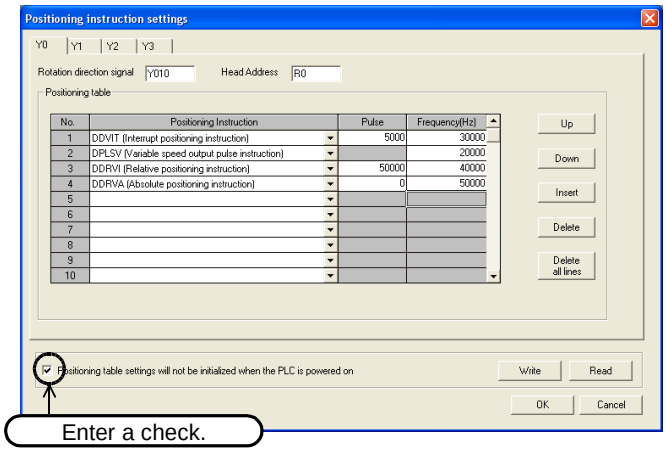

To use "pulses" and "frequency" changed by the display module or the indicator even after turning off and then on the power again, enter a check in "Positioning table settings will not be initialized when the PLC is powered on" check box in "Positioning instruction Setting" window of the positioning parameters. To use this function, use the uninterruptible power supply type devices.
If this function is not set, the data set by the positioning parameters will be initialized.

To read out and store "pulse" and "frequency" changed by the display module or the indicator:

1) In "Positioning instruction setting" window of positioning parameters, enter a check in "Positioning table settings will not be initialized when the PLC is powered on" check box.

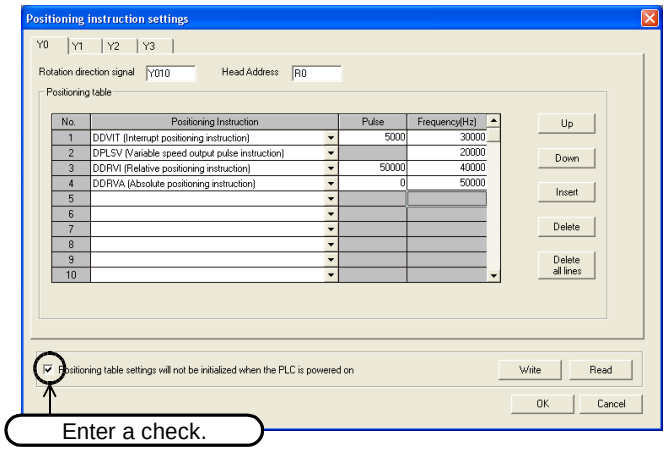

2) Click "Read" button to read out the set data ("pulse" and "frequency) from the connected main unit. This is exclusively for the positioning table number with the positioning type specified.

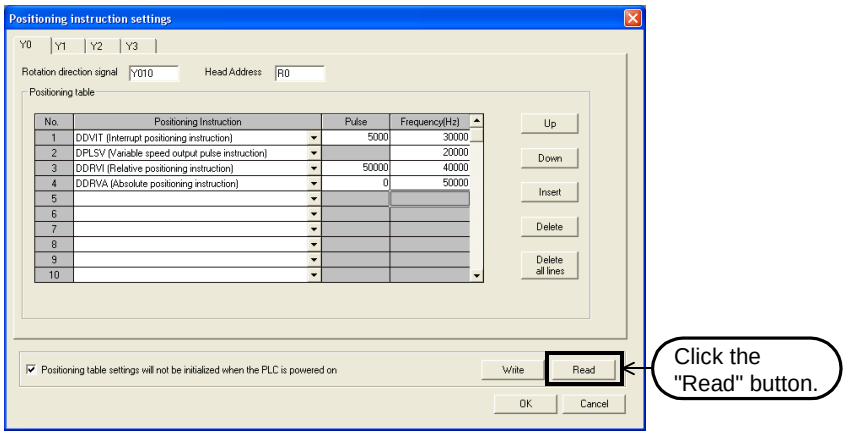

3) At the completion of register data reading, the data file will be stored.

12. Examples of Programs

Assuming that the MELSERVO Series 1-axis servo amplifier is used for control, this chapter shows various examples of programs.
For the connection examples of MELSERVO-C, -J2(S), -H, and -J3 Series, refer to the following chapters and manuals.

→ **Refer to Chapter 3 and the examples of connection shown in the Appendix.**
→ **Refer to the FX3U Hardware Edition.**
→ **Refer to the FX3UC Hardware Edition.**
→ **Refer to the manual of your servo amplifier.**

Operation		Instruction	Examples of programs		Description of instruction
			Relay ladder program	Step ladder program	
Mechanical zero return	DOG Search Zero Return	DSZR(FNC150)	Subsection 12.2.1	Subsection 12.3.1	Section 6.2
Absolute value detection	Reading of current ABS value	ABS(FNC155)	Section 12.5	-	Chapter 7
1-speed positioning	Drive to Increment	DRVI(FNC158)	Subsection 12.2.1	Subsection 12.3.1	Section 8.2
	Drive to Absolute	DRVA(FNC159)	Subsection 12.2.1	Subsection 12.3.1	Section 8.3
Batch data positioning mode		TBL(FNC152)	Section 12.4	-	Chapter 11

12.1 Input/Output Assignment

The programs shown in this chapter use 1 axis for Y000 (pulse output destination device). If other pulse output destination device are used, change various device numbers when reading the description.
Note that Y003 (pulse output destination device) can be used only if two FX3U-2HSY-ADP adapters are connected to the FX3U PLC.

Signal		Input/output number				Connected to
		Y000	Y001	Y002	Y003	
Pulse train*1 (pulse output destination)		Y000	Y001	Y002	Y003	Connected to MELSERVO Series servo amplifier.
Direction*2, *3 (rotation direction signal)		Y004	Y005	Y006	Y007	
CLEAR signal*3, *4		Y020	Y024	Y030	Y034	
Zero-phase signal*4, *5		X004	X005	X006	X007	
"Servo ready" signal*6		X014	X015	X016	X017	
Immediate stop command		X020	X040	X050	X070	Connected to external switches.
Zero return command		X021	X041	X051	X071	
Jog (+) command		X022	X042	X052	X072	
Jog (-) command		X023	X043	X053	X073	
Forward rotation positioning command		X024	X044	X054	X074	
Reverse rotation positioning command		X025	X045	X055	X075	
Stop command		X030	X034	X060	X064	
Near-point signal (DOG)*4, *5		X010	X011	X012	X013	Connected to sensors and limit switches.
Interrupt signal		X000	X001	X002	X003	
Forward rotation limit (LSF)*7		X026	X046	X056	X076	
Reverse rotation limit (LSR)*7		X027	X047	X057	X077	
To use absolute position detection system	ABS(bit0)	X031	X035	X061	X065	Connected to Mitsubishi MELSERVO Series servo amplifier (MR-J2,MR-J2S, MR-J3, MR-H)
	ABS(bit1)	X032	X036	X062	X066	
	"Send data ready" signal	X033	X037	X063	X067	
	Servo-ON signal	Y021	Y025	Y031	Y035	
	"ABS data transfer mode" signal	Y022	Y026	Y032	Y036	
	"ABS data request" signal	Y023	Y027	Y033	Y037	

*1. To use "forward rotation pulse train" signal and "reverse rotation pulse train" signal of FX3U-2HSY-ADP, change the name of this signal to "forward rotation pulse train" signal when reading the description.

*2. To use "forward rotation pulse train" signal and "reverse rotation pulse train" signal of FX3U-2HSY-ADP, change the name of this signal to "reverse rotation pulse train" signal when reading the description.

*3. If the FX3UC PLC of below Ver.2.00 is used, exchange the direction signal output number with the CLEAR signal output number.

*4. If the absolute position detection system is used, and if DSZR instruction and ZRN instruction are not used for the first zero return, this signal is not needed. To use the absolute position detection system, refer to the following chapter and manual.

→ **Refer to Chapter 7 and the manual of your servo amplifier.**

*5. To use ZRN instruction for zero return, assign the input number of the near-point signal (DOG) to the zero-phase signal. This is because ZRN instruction will not use the zero-phase signal.

*6. To use pin 3 of the CN1 connector of the MR-C□A servo amplifier for "servo ready" signal, set parameter 21 as follows:

Series	Parameter number	Setting value
MR-C	21	020

*7. To ensure safety, adopt the forward rotation limit switch and the reverse rotation limit switch on both sides: the PLC side and the servo amplifier side.
Note that the limit switches on the PLC side should be activated slightly earlier than the limit switches on the servo amplifier side.

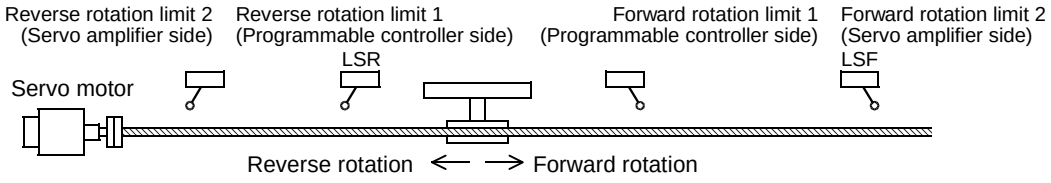

12.2 Programs for Forward/Reverse Rotation (Relay Ladder Program)

12.2.1 Example of Program

Positioning operation will be performed using the absolute positioning method as shown in the following chart:

→ **For details on input/output assignment, refer to Section 12.1.**

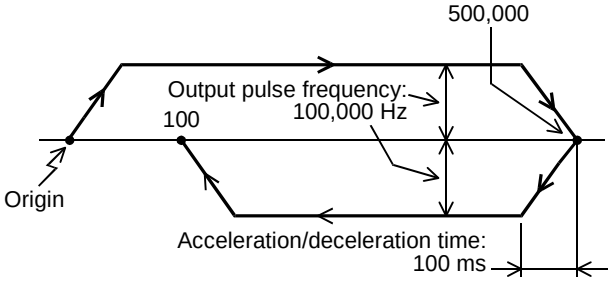

The following program is a relay ladder program.

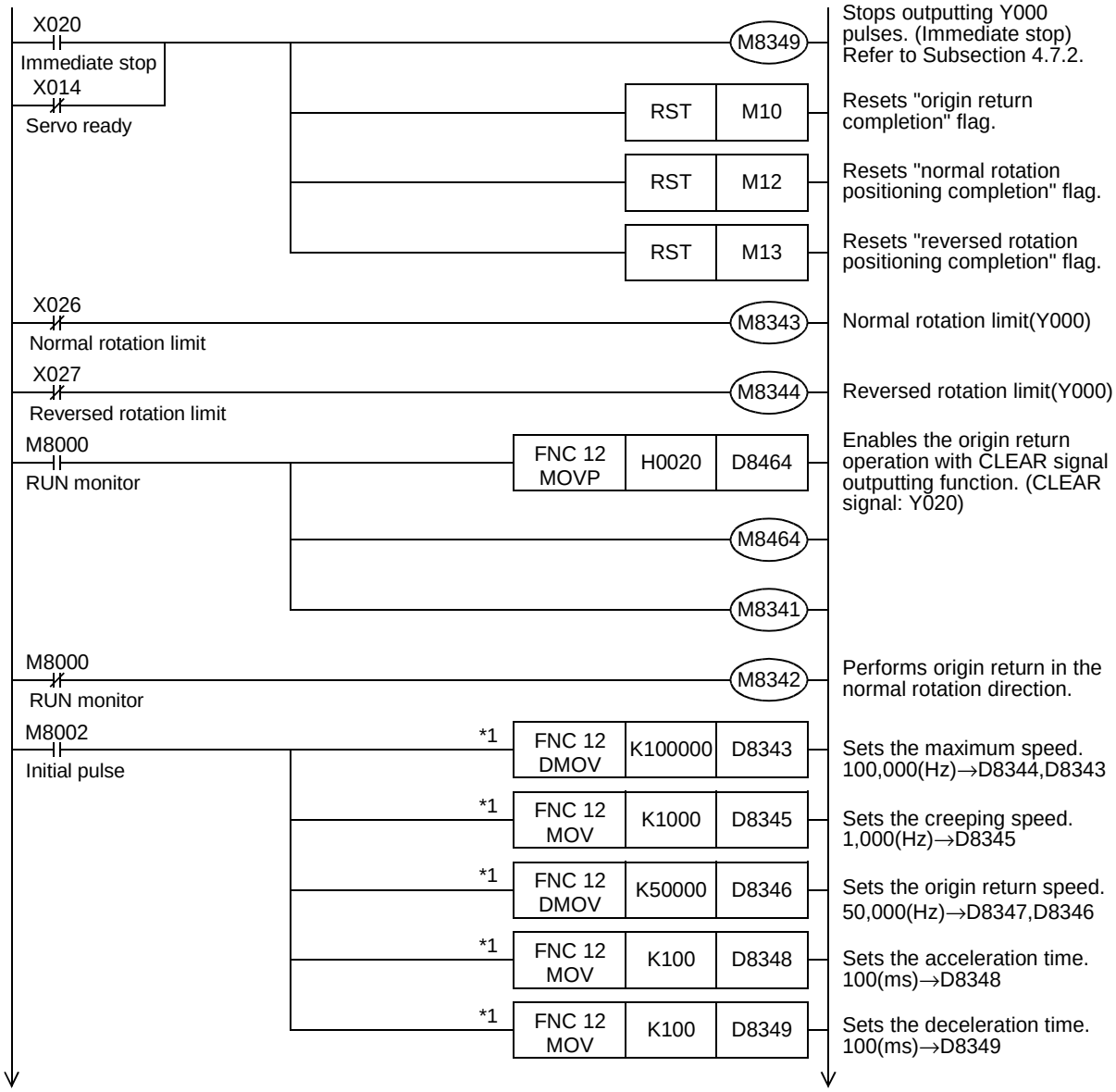

*1. If the initial values (maximum speed, acceleration/deceleration time, zero return speed, creep speed) can be used, it is not necessary to create the program.

→ **For the related devices, refer to Section 4.1 to Section 4.4.**

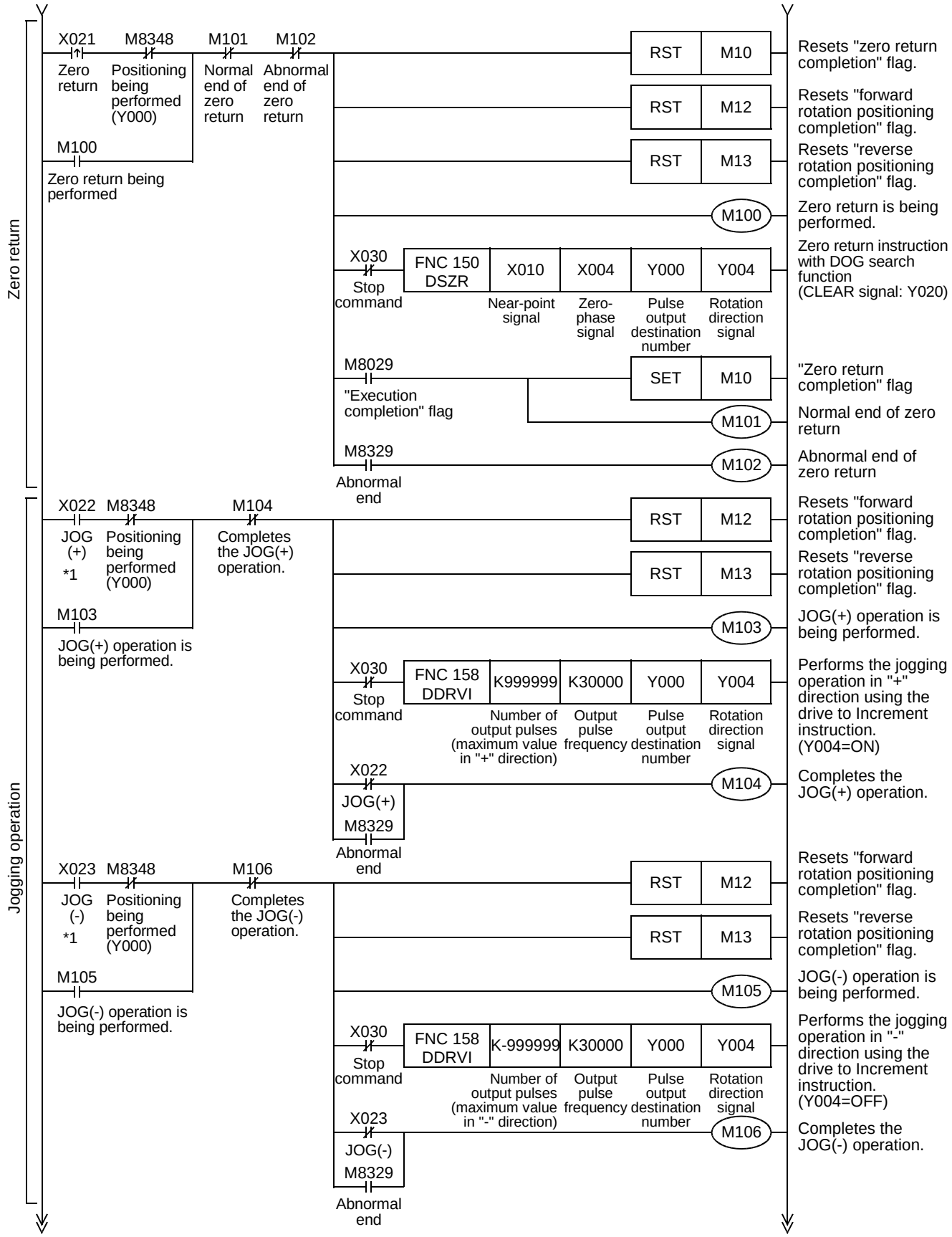

*1. The maximum transfer distance for each jogging operation is ±999,999 pulses (pulse output range of FNC158 (DRVI) instruction). To further move the workpiece, execute the JOG command again.

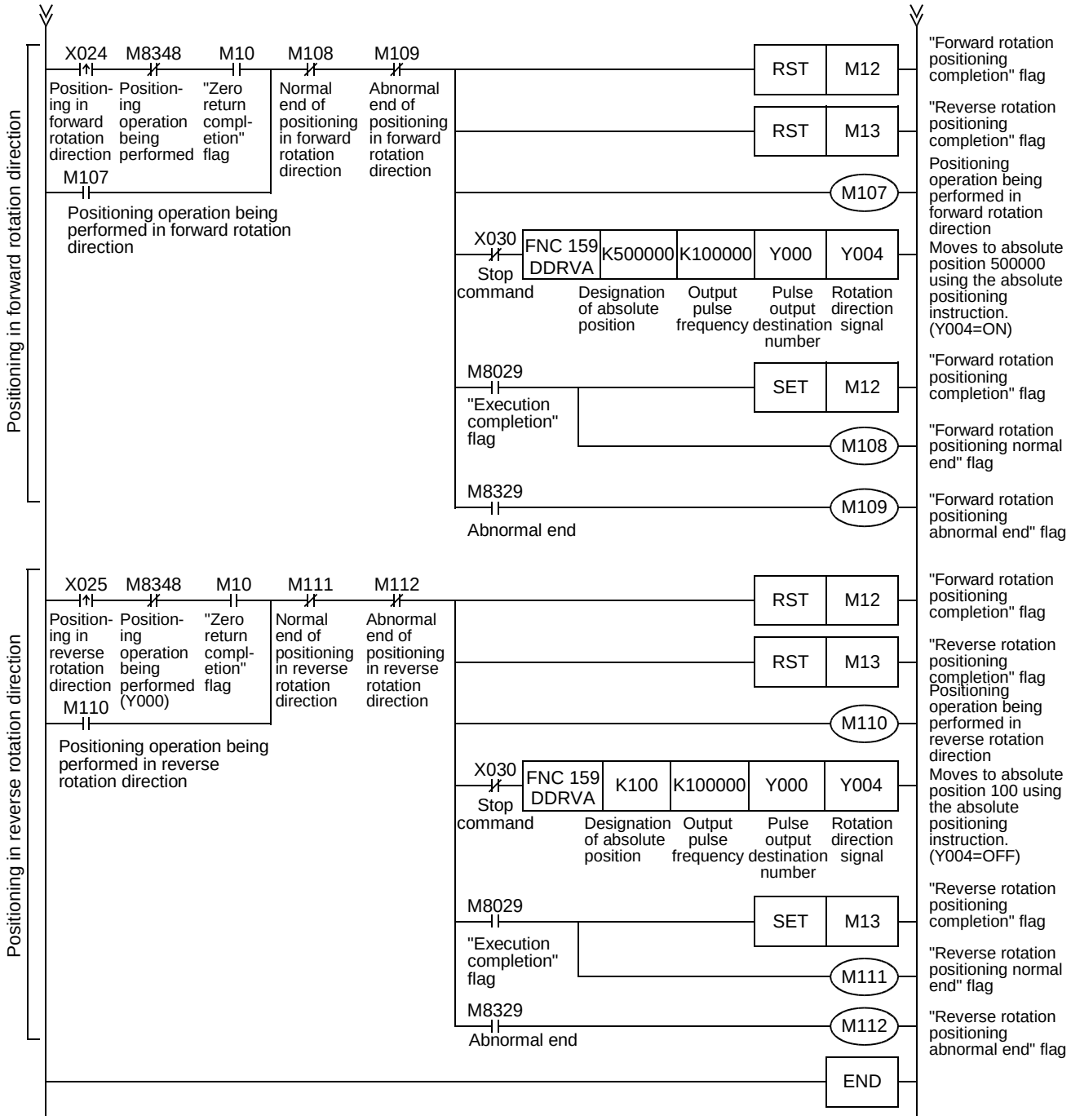
Positioning in forward rotation direction
X024
Positioning in forward rotation direction
M8348
Positioning operation being performed
M10
"Zero return completion" flag
M108
Normal end of positioning in forward rotation direction
M109
Abnormal end of positioning in forward rotation direction
M107
Positioning operation being performed in forward rotation direction
RST M12
"Forward rotation positioning completion" flag
RST M13
"Reverse rotation positioning completion" flag
M107
Positioning operation being performed in forward rotation direction
X030
Stop command
FNC 159 DDRVA
K500000
K100000
Y000
Y004
Designation of absolute position
Output pulse frequency
Pulse output destination number
Rotation direction signal
Moves to absolute position 500000 using the absolute positioning instruction. (Y004=ON)
M8029
"Execution completion" flag
SET M12
"Forward rotation positioning completion" flag
M108
"Forward rotation positioning normal end" flag
M8329
Abnormal end
M109
"Forward rotation positioning abnormal end" flag
Positioning in reverse rotation direction
X025
Positioning in reverse rotation direction
M8348
Positioning operation being performed (Y000)
M10
"Zero return completion" flag
M111
Normal end of positioning in reverse rotation direction
M112
Abnormal end of positioning in reverse rotation direction
M110
Positioning operation being performed in reverse rotation direction
RST M12
"Forward rotation positioning completion" flag
RST M13
"Reverse rotation positioning completion" flag
M110
Positioning operation being performed in reverse rotation direction
X030
Stop command
FNC 159 DDRVA
K100
K100000
Y000
Y004
Designation of absolute position
Output pulse frequency
Pulse output destination number
Rotation direction signal
Moves to absolute position 100 using the absolute positioning instruction. (Y004=OFF)
M8029
"Execution completion" flag
SET M13
"Reverse rotation positioning completion" flag
M111
"Reverse rotation positioning normal end" flag
M8329
Abnormal end
M112
"Reverse rotation positioning abnormal end" flag
END

12.3 Programs for Forward/Reverse Rotation (Step Ladder (STL) Program)

12.3.1 Example of Program

Positioning operation will be performed using the absolute positioning method as shown in the following chart:

→ **For details on input/output assignment, refer to Section 12.1.**

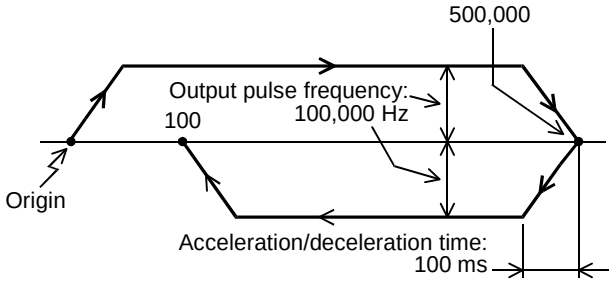

The following program uses the step ladder (STL) instruction.

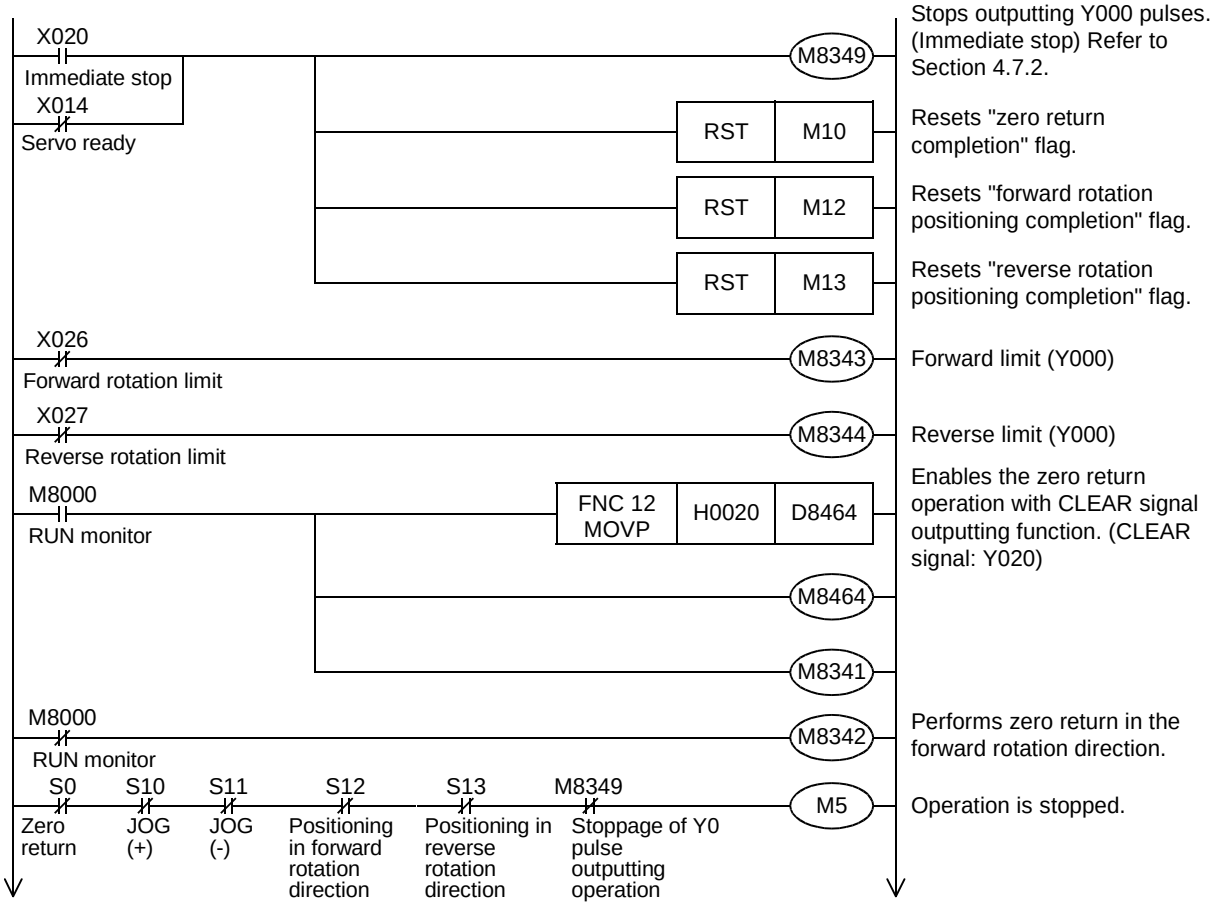

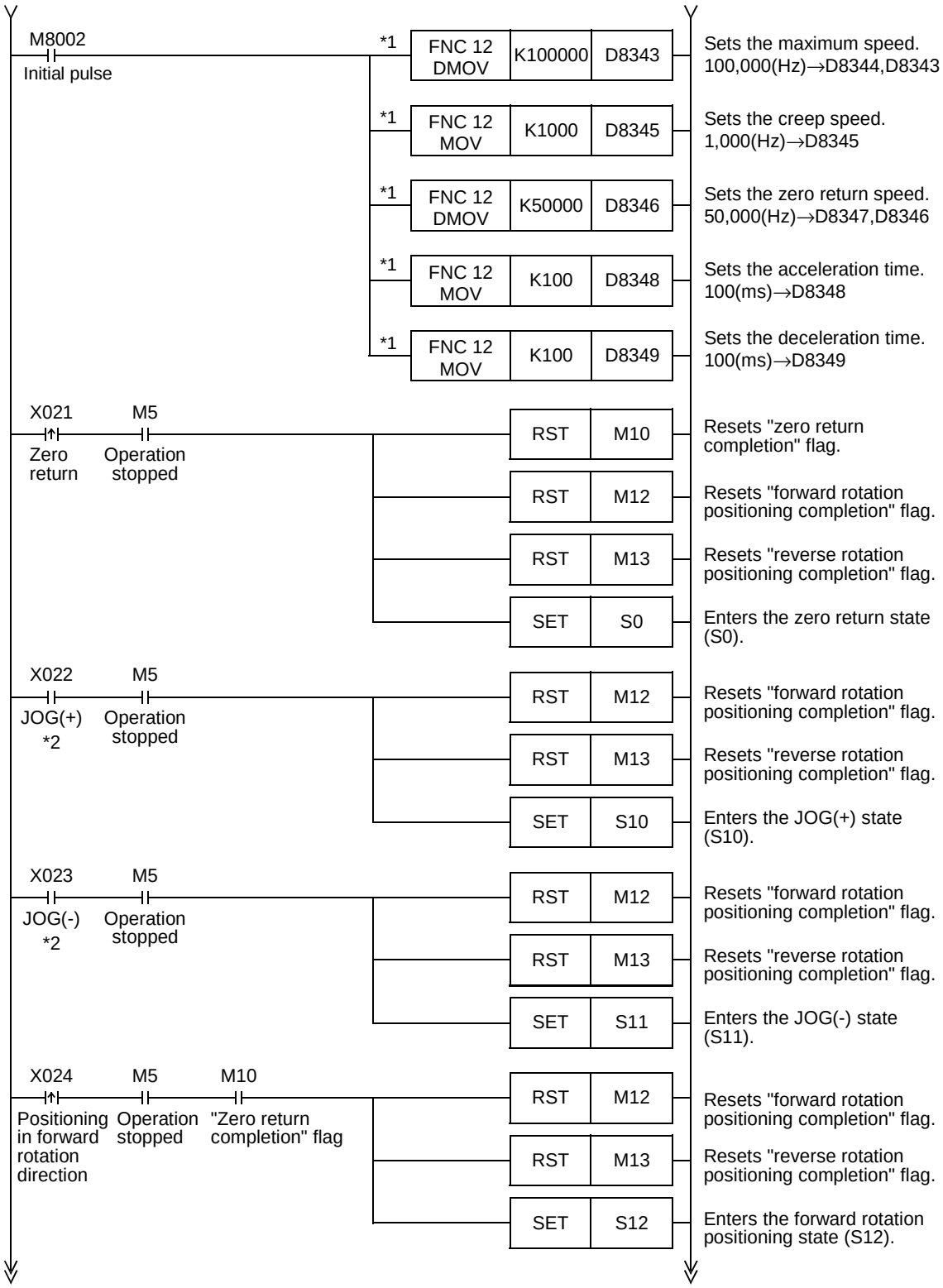

*1. If the initial values (maximum speed, acceleration/deceleration time, zero return speed, creep speed) can be used, it is not necessary to create the program.

→ **For the related devices, refer to Section 4.1 to Section 4.4.**

*2. The maximum transfer distance for each jogging operation is ±999,999 pulses (pulse output range of FNC158 (DRVI) instruction). To further move the workpiece, execute the JOG command again.

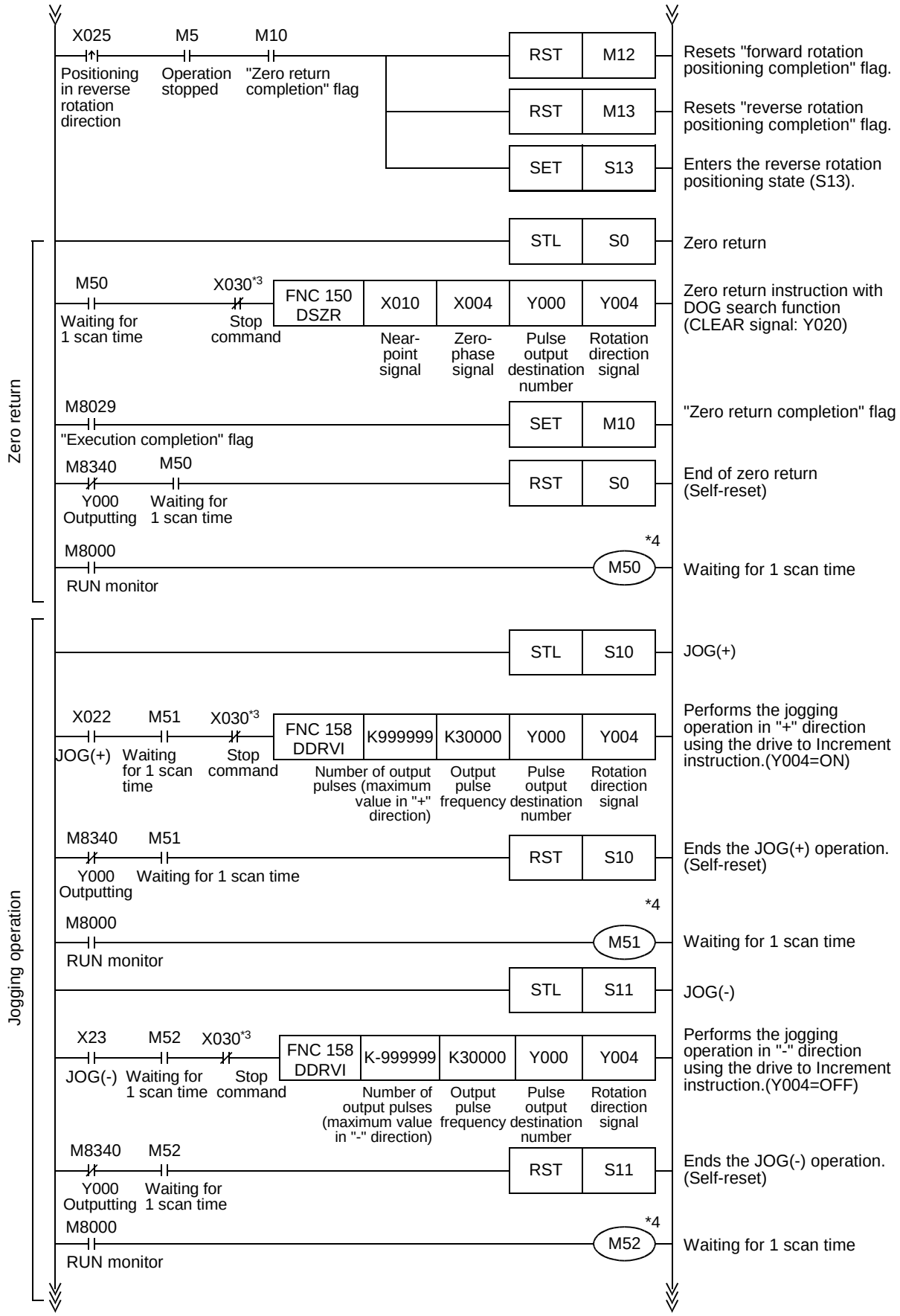

*3. To stop the positioning operation, be sure to insert the stop contact before the positioning instruction so that STL instruction cannot be turned off (reset) until "pulse output monitor" flag (M8340 (for Y000)) is turned off.

*4. To prevent simultaneous activation of positioning instructions, the instruction activation timing should be delayed by 1 scan time.

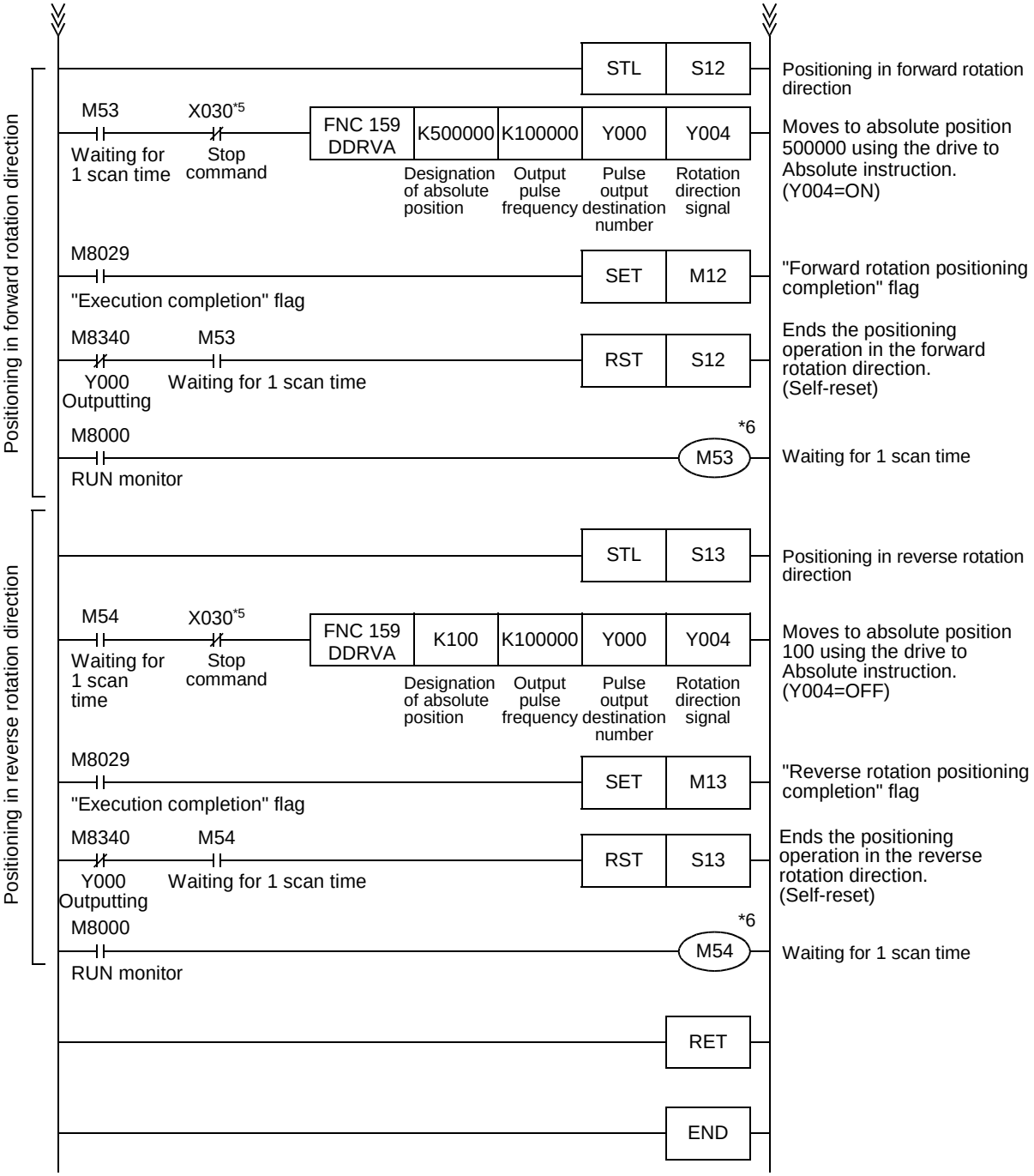

*5. To stop the positioning operation, be sure to insert the stop contact before the positioning instruction so that STL instruction cannot be turned off (reset) until "pulse output monitor" flag (M8340 (for Y000)) is turned off.

*6. To prevent simultaneous activation of positioning instructions, the instruction activation timing should be delayed by 1 scan time.

12.4 Positioning Using Batch Setting Method

Positioning operation will be performed using the absolute positioning method as shown in the following chart:
→ **For details on input/output assignment, refer to Section 12.1**

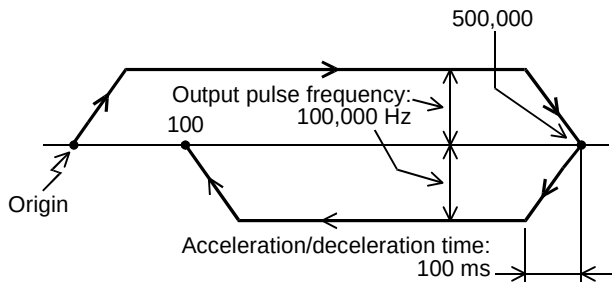

12.4.1 Setting Using GX Developer

This section describes how to set the positioning parameters using GX Developer of Ver.8.23Z.

1 **On the project tree displayed on the left side of the screen, double-click "Parameter" and then "PLC parameter".**

If the project tree is not displayed on the screen, click "View" on the menu bar, and then click "Project Data List".

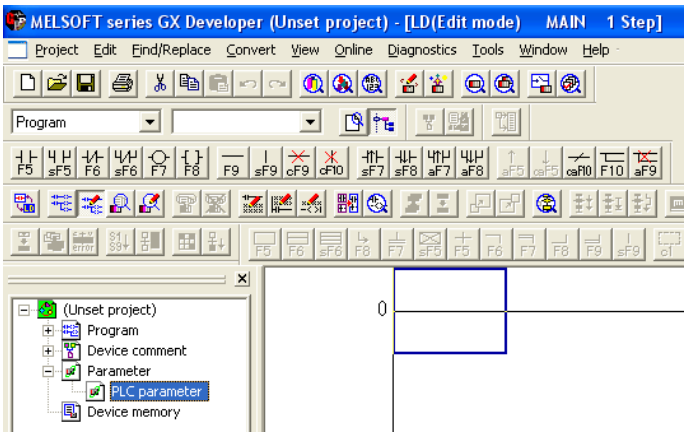

2 **Click "Memory Capacity", and then enter a check in "Positioning Instruction settings" check box.**

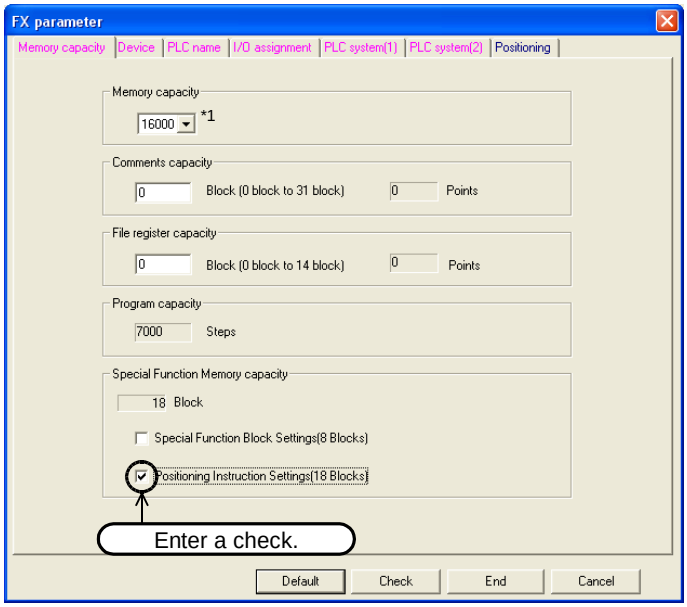

*1. 9,000 steps are needed to set the positioning data. If there is not enough capacity for programming, set "memory capacity" to 16,000 steps.

3 Click "Positioning" tab, and then set Y000 (pulse output destination) as follows.

Before clicking "Positioning" tab, click "Memory Capacity" tab, and then enter a check in "Positioning" check box. After entering a check, positioning data can be set.

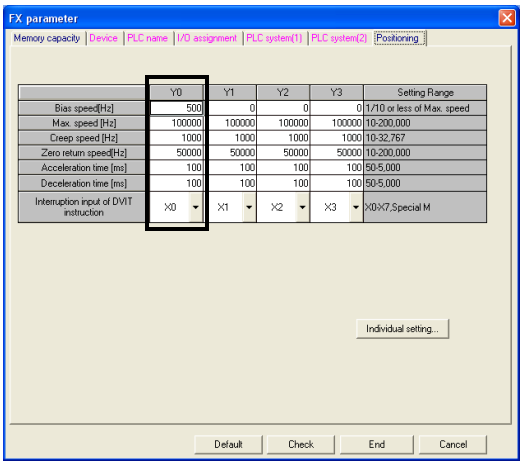

Setting item	Setting value
Bias speed (Hz)	500
Maximum speed (Hz)	100,000
Creep speed (Hz)	1000
Zero return speed (Hz)	50,000
Acceleration time (ms)	100
Deceleration time (ms)	100
Interrupt input for DVIT instruction	X000

4 Click "Individual setting" button. "Individual setting" setting window will appear. In this window, click "Y000" tab to display the positioning table for Y000 (pulse output destination). Set the data in the potioning table as follows:

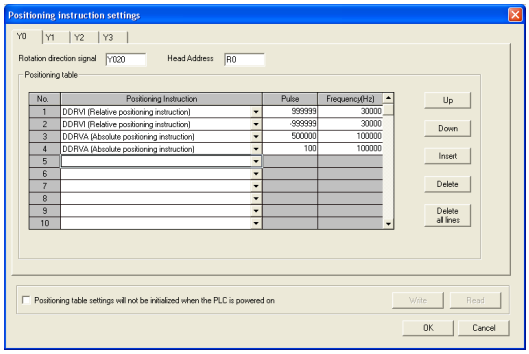

Setting item		Setting value
Rotation direction signal		Y004
First device		R0
No. 1	Positioning type	DDRVI (drive to increment)
	Number of pulses (pls)	999,999
	Frequency (Hz)	30,000
No. 2	Positioning type	DDRVI (drive to increment)
	Number of pulses (pls)	-999,999
	Frequency (Hz)	30,000
No. 3	Positioning type	DDRVA (drive to absolute)
	Number of pulses (pls)	500,000
	Frequency (Hz)	100,000
No. 4	Positioning type	DDRVA (drive to absolute)
	Number of pulses (pls)	100
	Frequency (Hz)	100,000

5 Create a program.

6 On the bar, click "Online" and then "Write to PLC". "Write to PLC" window will appear.

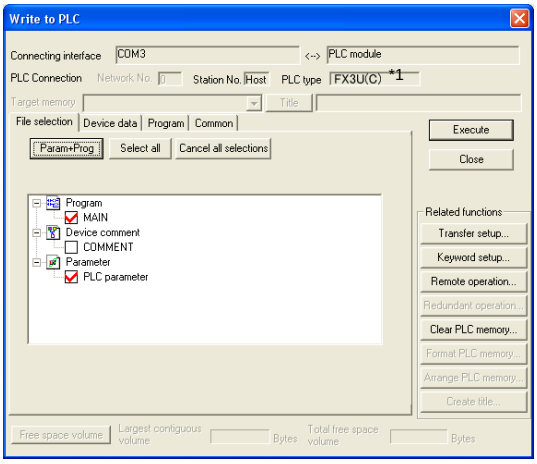

*1. Depending on the version of GX Developer, the PLC type may be set to "FX3UC".

7 Click "Param+Prog" buttons, and then click "Execute" button.

The parameters and the created program will be transferred to the PLC.
To enable the transferred parameters, stop the PLC, and then restart it.

12.4.2 Operation Program

An example of relay ladder program is shown below:

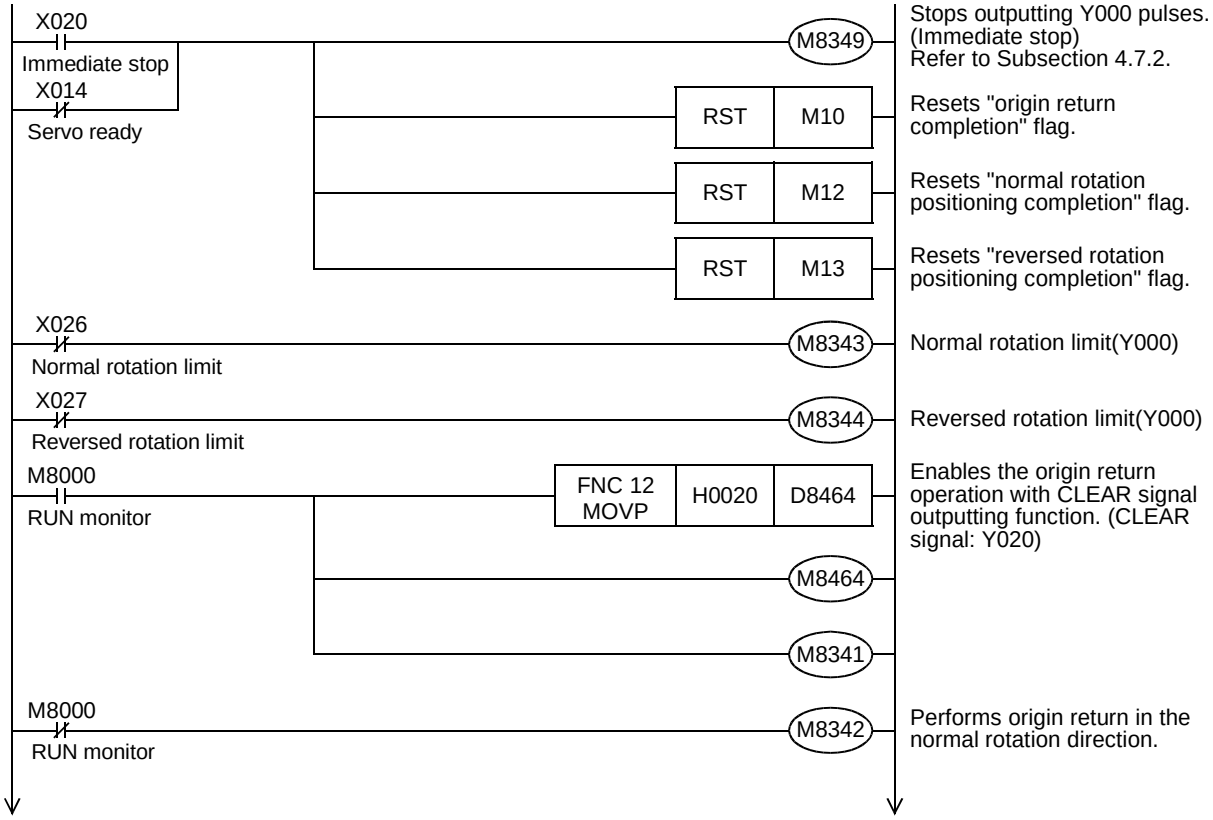

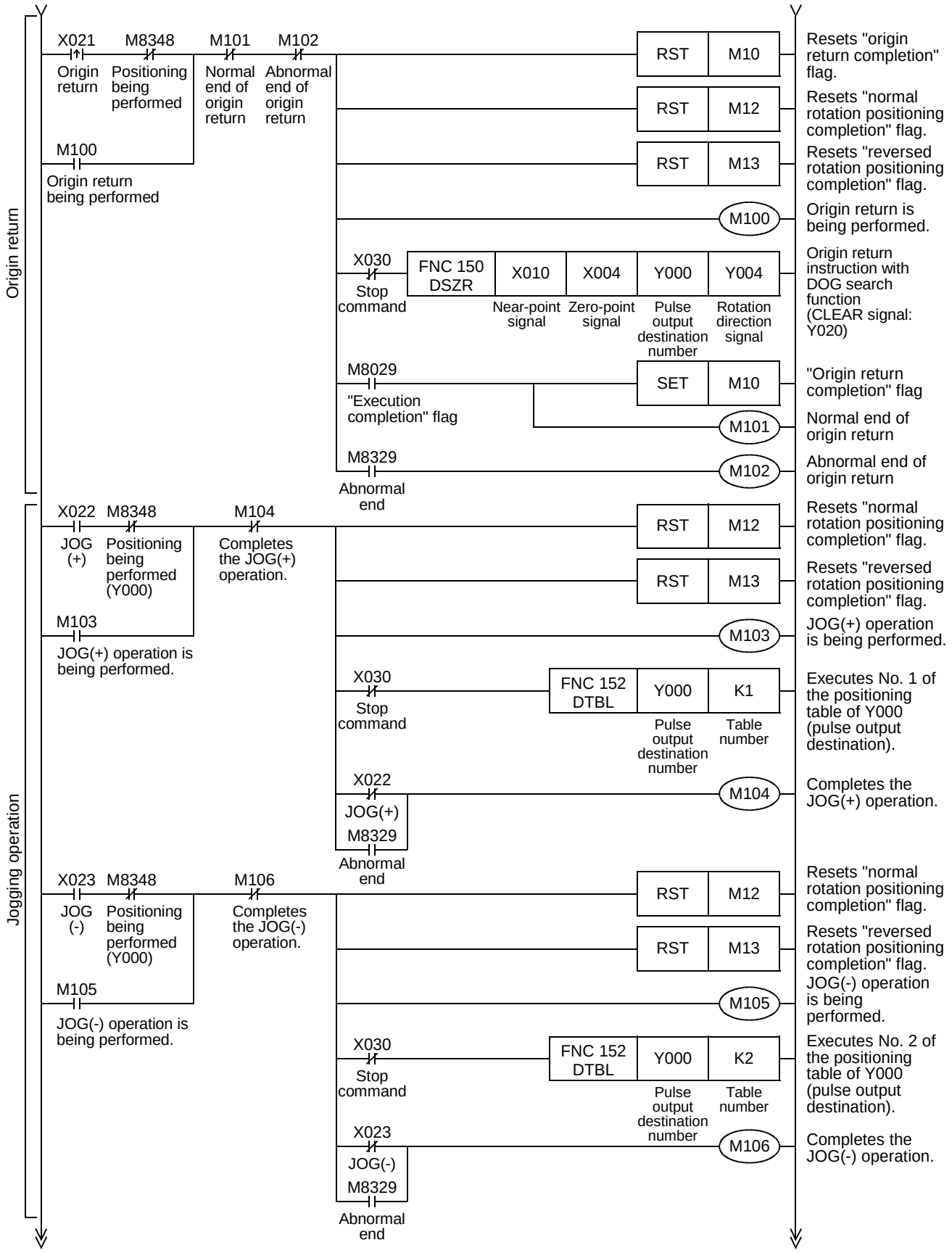
Origin return
X021
Origin return
M8348
Positioning being performed
M101
Normal end of origin return
M102
Abnormal end of origin return
M100
Origin return being performed
RST M10
Resets "origin return completion" flag.
RST M12
Resets "normal rotation positioning completion" flag.
RST M13
Resets "reversed rotation positioning completion" flag.
M100
Origin return is being performed.
X030
Stop command
FNC 150 DSZR
X010
Near-point signal
X004
Zero-point signal
Y000
Pulse output destination number
Y004
Rotation direction signal
Origin return instruction with DOG search function (CLEAR signal: Y020)
M8029
"Execution completion" flag
SET M10
"Origin return completion" flag
M101
Normal end of origin return
M8329
Abnormal end
M102
Abnormal end of origin return
Jogging operation
X022
JOG (+)
M8348
Positioning being performed (Y000)
M104
Completes the JOG(+) operation.
M103
JOG(+) operation is being performed.
RST M12
Resets "normal rotation positioning completion" flag.
RST M13
Resets "reversed rotation positioning completion" flag.
M103
JOG(+) operation is being performed.
X030
Stop command
FNC 152 DTBL
Y000
Pulse output destination number
K1
Table number
Executes No. 1 of the positioning table of Y000 (pulse output destination).
X022
JOG(+)
M8329
Abnormal end
M104
Completes the JOG(+) operation.
X023
JOG (-)
M8348
Positioning being performed (Y000)
M106
Completes the JOG(-) operation.
M105
JOG(-) operation is being performed.
RST M12
Resets "normal rotation positioning completion" flag.
RST M13
Resets "reversed rotation positioning completion" flag.
M105
JOG(-) operation is being performed.
X030
Stop command
FNC 152 DTBL
Y000
Pulse output destination number
K2
Table number
Executes No. 2 of the positioning table of Y000 (pulse output destination).
X023
JOG(-)
M8329
Abnormal end
M106
Completes the JOG(-) operation.

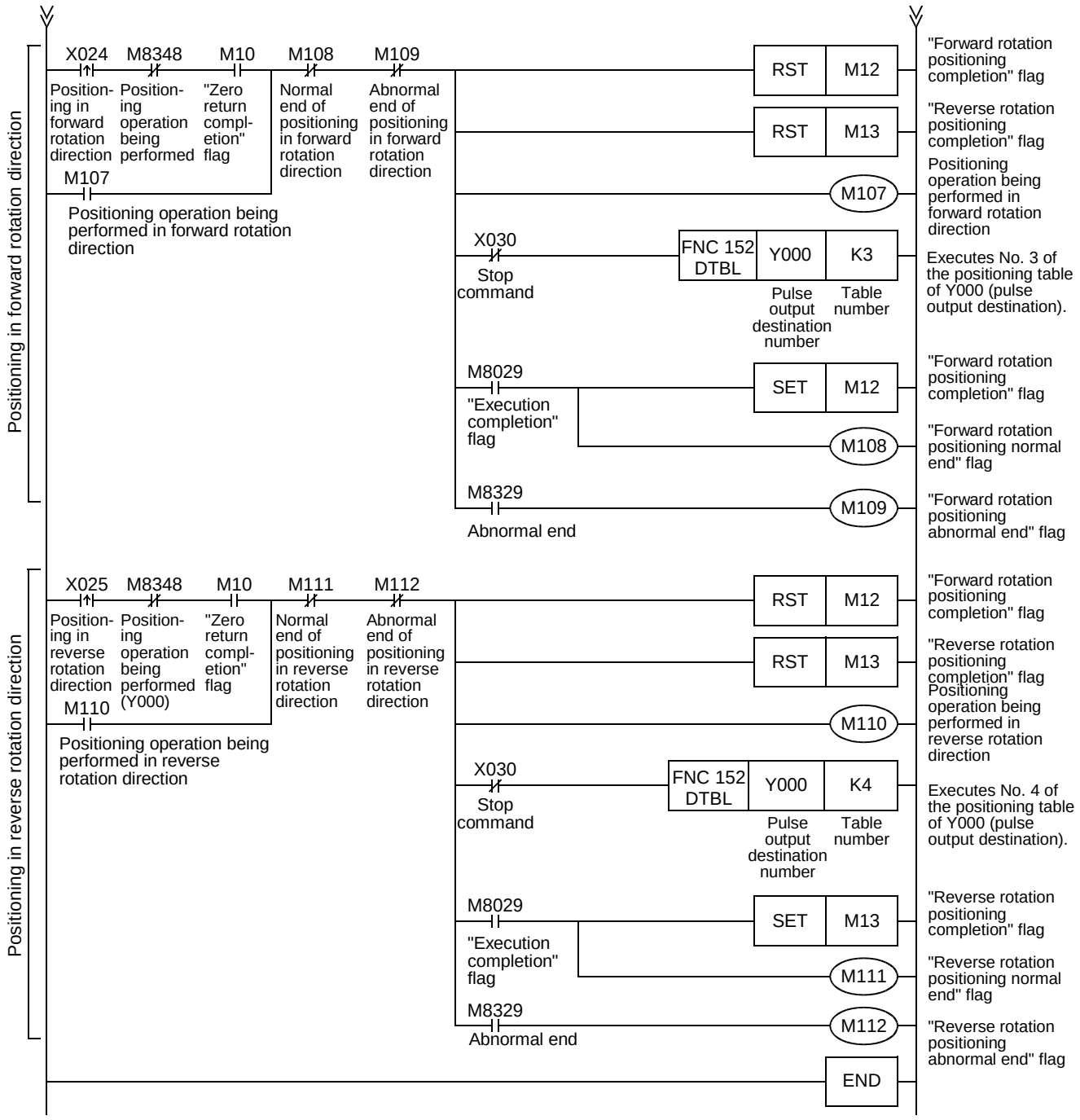
Positioning in forward rotation direction
X024
Positioning in forward rotation direction
M8348
Positioning operation being performed
M10
"Zero return completion" flag
M108
Normal end of positioning in forward rotation direction
M109
Abnormal end of positioning in forward rotation direction
M107
Positioning operation being performed in forward rotation direction
RST M12
"Forward rotation positioning completion" flag
RST M13
"Reverse rotation positioning completion" flag
M107
Positioning operation being performed in forward rotation direction
X030
Stop command
FNC 152 DTBL
Y000
Pulse output destination number
K3
Table number
Executes No. 3 of the positioning table of Y000 (pulse output destination).
M8029
"Execution completion" flag
SET M12
"Forward rotation positioning completion" flag
M108
"Forward rotation positioning normal end" flag
M8329
Abnormal end
M109
"Forward rotation positioning abnormal end" flag
Positioning in reverse rotation direction
X025
Positioning in reverse rotation direction
M8348
Positioning operation being performed (Y000)
M10
"Zero return completion" flag
M111
Normal end of positioning in reverse rotation direction
M112
Abnormal end of positioning in reverse rotation direction
M110
Positioning operation being performed in reverse rotation direction
RST M12
"Forward rotation positioning completion" flag
RST M13
"Reverse rotation positioning completion" flag
M110
Positioning operation being performed in reverse rotation direction
X030
Stop command
FNC 152 DTBL
Y000
Pulse output destination number
K4
Table number
Executes No. 4 of the positioning table of Y000 (pulse output destination).
M8029
"Execution completion" flag
SET M13
"Reverse rotation positioning completion" flag
M111
"Reverse rotation positioning normal end" flag
M8329
Abnormal end
M112
"Reverse rotation positioning abnormal end" flag
END

12.5 Program for Reading Current ABS Value Using ABS Instruction

1) Program for storing ABS data in current value registers specified by positioning instruction for Y000 (pulse output destination)

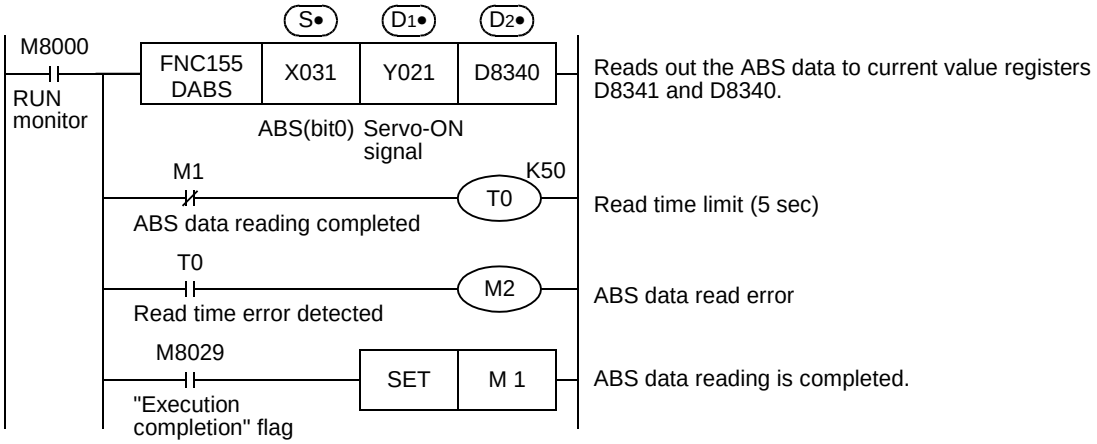

2) Program for storing ABS data in current value registers of FX2N-1PG(-E) or FX2N-10PG

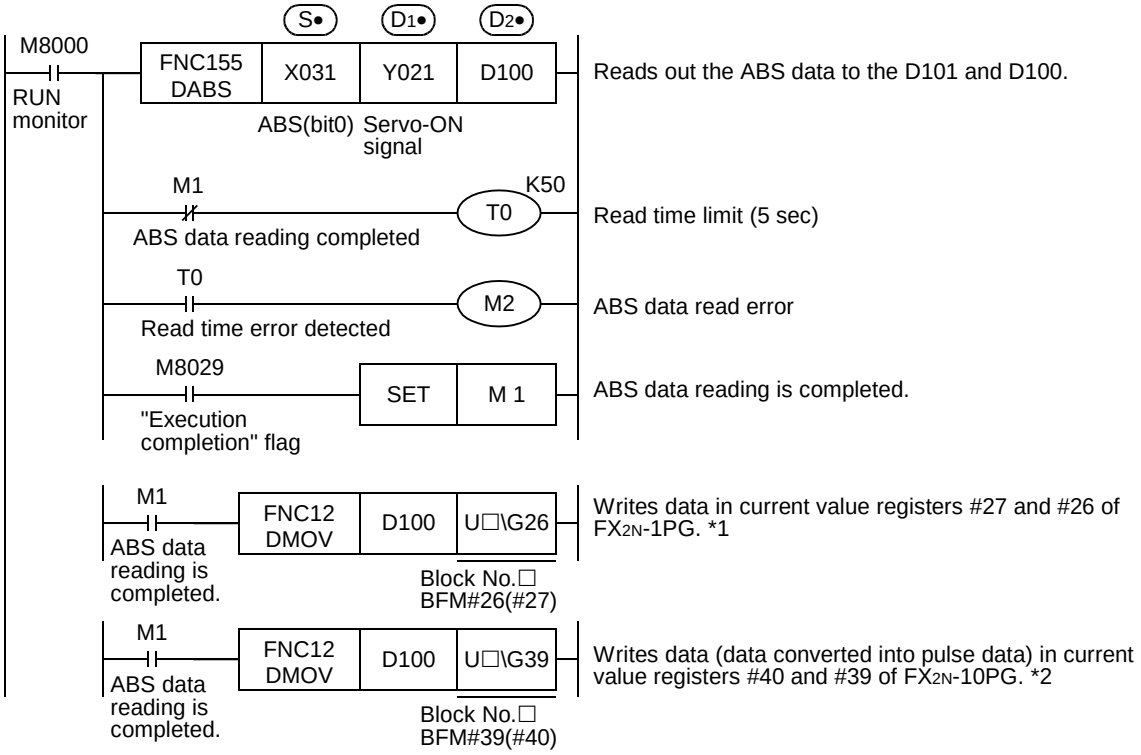

Caution:

*1. The ABS data will be read out as a pulse coverted value. For this reason, be sure to specify "motor system" when setting parameters (BFM #3) for FX2N-1PG(-E).

*2. When writing the ABS data into FX2N-10PG, be sure to use the current value registers (BFM #40, BFM #39) to store the converted pulse data.

13. Troubleshooting

13.1 LED Indicator Lamp Check

If an error occurs, check the ON/OFF status of LED indicator lamps on the PLC to know the outline of the error.This section, however, does not describe all the LED indicator lamps of the main unit. For details of LED indicator lamp, refer to the following manuals of the PLC.

→ **Refer to the FX3U Hardware Edition.**
→ **Refer to the FX3UC Hardware Edition.**

FX3U PLC

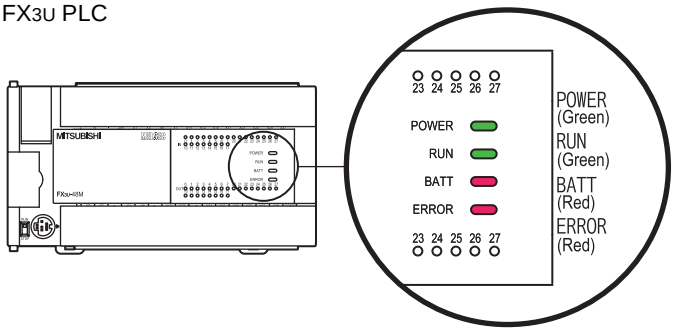

FX3UC PLC

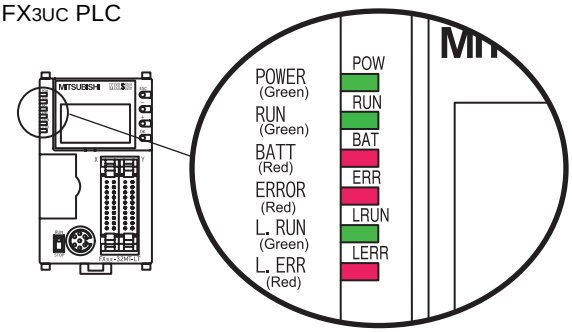

13.1.1 POWER Indicator Lamp (Statuses: ON, flashing, OFF)

Lamp status	Status of PLC	Troubleshooting
ON	The specified voltage is properly supplied to the power supply terminal.	The power is being properly supplied.
Flashing	The PLC may be at one of the following statuses: • The specified voltage/current is not supplied to the power supply terminal. • An external line is not properly connected. • The PLC has a problem.	• Check the power supply voltage. • Excluding the power cable, disconnect all the other cables, and then turn on the power again. Check the lamp status. If the lamp flashes again, please contact the nearest office of Mitsubishi Electric distributor.
OFF	The PLC may be at one of the following statuses: • The power is off. • The specified voltage is not supplied to the power supply terminal. • The power cable is disconnected.	If the power is on, check the power supply unit and the power supply line. If the power is properly supplied, please contact the nearest office of Mitsubishi Electric distributor.

13.1.2 RUN Indicator Lamp (Statuses: ON, OFF)

Lamp status	Status of PLC	Troubleshooting
ON	The sequence program is being executed.	The RUN indicator lamp indicates the operation status of the PLC. Note that the RUN indicator lamp will go out depending on the status of the ERROR indicator lamp (refer to Subsection 13.1.4).
OFF	Execution of the sequence program is stopped.	

13.1.3 BATT Indicator Lamp (Statuses: ON, OFF)

Lamp status	Status of PLC	Troubleshooting
ON	The voltage of the battery is too low.	Immediately replace the battery (refer to the manual of the PLC).
OFF	The battery supplies the voltage specified by the D8006 or more.	The PLC has no problems.

13.1.4 ERROR indicator lamp (Statuses: ON, flashing, OFF)

Lamp status	Status of PLC	Troubleshooting
ON	The watchdog timer error may be detected, or the hardware of the PLC may be damaged.	1) Stop the PLC, and then turn on the power again.If the ERROR indicator lamp goes out, check if a watchdog timer error has been detected, and take one of the following measures. - Review the program. The maximum value of the scanning time (D8012) should not be larger than the set value of the watchdog timer (D8000). - The interrupt input and the pulse catch input should not be turned on and off too frequently during 1 scan time. - The frequency of the pulse input to the high-speed counter should not exceed the specified range (duty:50%) - Add several WDT instructions. Set several WDT instructions in the program so that the watchdog timer can be reset several times during 1 scan time. - Change the set value of the watchdog timer. Using the program, change the set value of the watchdog timer (D8000) so that the set value of the watchdog timer (D8000) can be larger than the maximum value of the scanning time (D8012). 2) Remove the PLC, and put it on a workbench. Supply another source of power to the PLC. If the ERROR indicator lamp does not light, the cause of the problem may be noise. In this case, take the following measures. - Check the grounding line, and change the wiring route and the installation place. - Adopt a noise filter for the power supply line. 3) If taking measures 1) and 2) does not turn off the ERROR indicator lamp, please contact the nearest office of Mitsubishi Electric distributor.
Flashing	The PLC has one of the following errors: • Parameter error • Syntax error • Circuit error	Diagnose the PLC (PC), or check the programs using the programming tool. For countermeasures, refer to the following manual of the applied PLC. → **Programming manual**
OFF	Errors that can stop the PLC are not detected.	If an operation error is detected on the PLC, diagnose the PLC (PC), or check the programs using the programming tool. There is a strong possibility that "I/O configuration error", "parallel link/ communication error", or "operation error" has been detected.

13.1.5 Pulse Output Destination Device and Rotation Direction Output Indicator Lamp

1. If transistor outputs of the main unit are used for positioning

Signal	LED status during execution of positioning instruction	Description
"Pulse output destination device" (pulse train) signal	Turned on and off at high speed	The pulse outputting operation is controlled by the positioning instruction.
	OFF	The PLC may be at the following status: 1) The operation of the positioning instruction is completed. 2) The positioning instruction turns ON, but an operation error is detected. The instruction, therefore, is not being executed. To check the error, refer to the following section: → **Refer to Subsection. 13.2.1 "Error code check method".**
"Rotation direction output" (direction) signal	ON	Operation is being performed in the forward rotation direction.
	OFF	The PLC may be at the following status: 1) The positioning instruction turns ON, and operation is being performed in the reverse rotation direction. 2) The positioning instruction turns ON, but an operation error is detected. The instruction, therefore, is not being executed. To check the error, refer to the following section: → **Refer to Subsection. 13.2.1 "Error Code Check Method".**

2. If the high-speed output special adapter (FX3U-2HSY-ADP) is used for positioning

Status of pulse output method setting switch	Signal	LED status during execution of positioning instruction	Description
PLS•DIR side	"Pulse output destination device" (pulse train)	Turned on and off at high speed	The pulse outputting operation is controlled by the positioning instruction.
		OFF	The PLC may be at the following status: 1) The operation of the positioning instruction is completed. 2) An operation error occured in positioning instruction. The instruction, therefore, is not being executed. To check the error, refer to the following section: → **Refer to Subsection. 13.2.1 "Error Code Check Method".**
	"Rotation direction output" (direction)	ON	Forward operation is in execution.
		OFF	The PLC may be at the following status: 1) The positioning instruction turns ON, and operation is being performed in the reverse rotation direction. 2) An operation error occured in positioning instruction. The instruction, therefore, is not being executed. To check the error, refer to the following section: → **Refer to Subsection. 13.2.1 "Error Code Check Method".**
FP/RP side	"Pulse output destination device" (Forward pulse train)	Turned on and off at high speed	Forward operation is in execution by positioning instructions. Reverse pulse train is OFF.
		OFF	The PLC may be at the following status: 1) The positioning instruction turns ON, and operation is being performed in the reverse rotation direction. 2) An operation error occured in positioning instruction. The instruction, therefore, is not being executed. To check the error, refer to the following section: → **Refer to Subsection. 13.2.1 "Error Code Check Method".**
	"Rotation direction output" (Reverse pulse train)	Turned on and off at high speed	Reverse operation is in execution by positioning instructions. Forward pulse train is OFF.
		OFF	The PLC may be at the following status: 1) The positioning instruction turns ON, and operation is being performed in the forward rotation direction. 2) An operation error occured in positioning instruction. The instruction, therefore, is not being executed. To check the error, refer to the following section: → **Refer to Subsection. 13.2.1 "Error Code Check Method".**

13.2 Error Check

13.2.1 Error Code Check Method

This section describes how to check the error codes using GX Developer.
If the display module (FX3U-7DM) is used, use "error check" function of the display module to check the error codes. For details of operation of the display module, refer to the following manuals:

→ **FX3U Hardware Edition.**
→ **FX3UC Hardware Edition.**

1 Connect the personal computer to the PLC.

2 Diagnose the PLC.

On the tool menu bar, click "Diagnostics", and then click "PLC diagnostics" to diagnose the programmble controller.

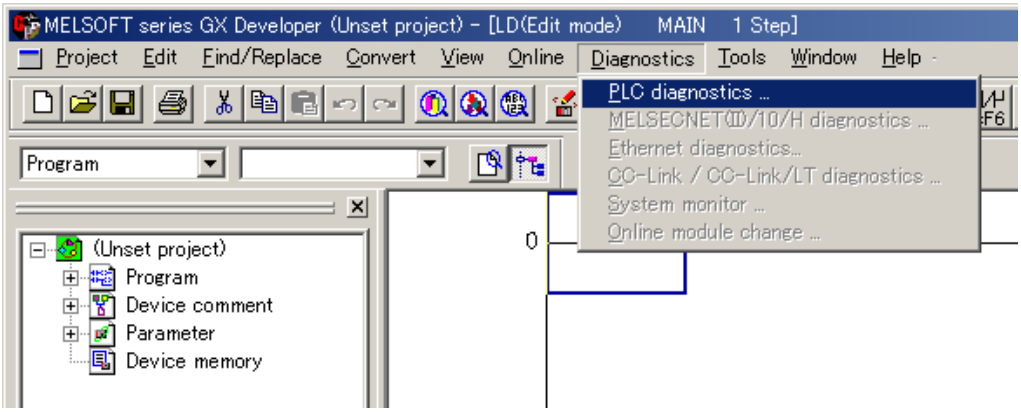

3 Check the diagnosis result.

The following window will appear. Check the details of the error shown on the window.

<Example of error display screen>

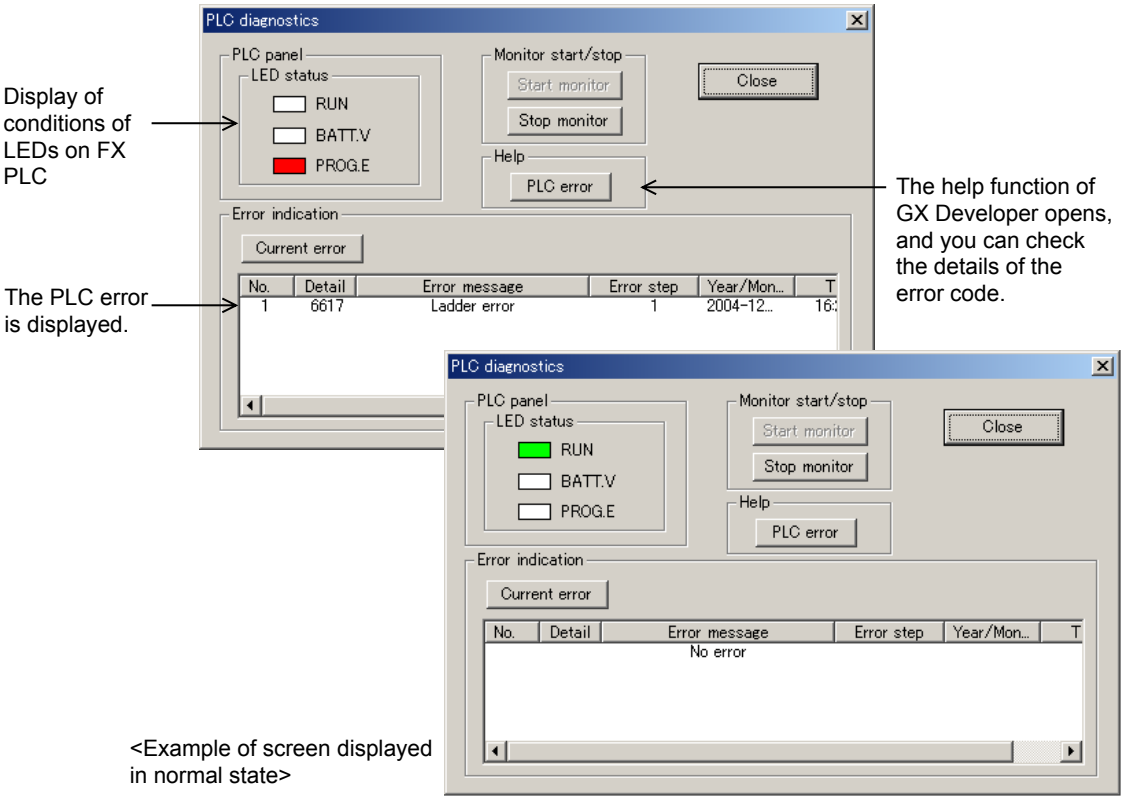

<Example of screen displayed in normal state>

13.2.2 Error Codes

This section describes error codes related to the positioning instructions. For details of the error codes, refer to the following manual.

→ **Refer to the programming manual.**

Error code	Operation after detecting error	Description of error	Troubleshooting
Operation error [M8067 (D8067)]			
0000	Operation will be continued.	No error detected	
6705		The device specified by the operand of the applied instruction is a wrong device.	This error occurs during operation. Check the program or the operand of the applied instruction. Even if no syntax error or circuit error is detected, an operation error may occur for the following reason: Example: T200Z is not an error. However, if Z = 400, the result of operation will be T600. This means that the device number is out of the specified range, and an operation error will be detected.
6706		The device number or the data specified by the operand of the applied instruction is out of the specified range.	
6760		Sum error of ABS data sent from servo amplifier	Check the servo amplifier for disconnection. Also check the set data.
6763		1) The input (X) specified by DSZR, DVIT, or ZRN instruction is already used for the other instruction. 2) The interruption signal device number specified by DVIT instruction is out of the setting range.	1) Check that the input (X) specified by DSZR, DVIT, or ZRN instruction is not used for the following items: - Input interruption (including delay function) - High-speed counter (C235 to C255) - Pulse catch (M8050 to M8057) - SPD instruction 2) Check the data set in the D8336 (interruption signal designation device for DVIT instruction).
6764		The pulse output number is already used for a positioning instruction or pulse output instruction (PLSY, PWM,etc.).	Check that the output specified as the pulse output destination is not activated by the other positioning instruction.

13.3 If the Servo Motor or the Stepping Motor Does Not Operate

If the servo motor or the stepping motor does not operate, check the following items.

1) Check the wiring condition.

→ **For output specifications, refer to Section 2.5.**

→ **To connect the MELSERVO Series, refer to the examples of connection shown in the Appendix.**

→ **For details on the servo amplifier (drive unit), refer to the manual of your unit.**

2) Execute the positioning instruction, and then check the statuses of the following LED indicator lamps.

→ **For details on lamp statuses, refer to Subsection 13.1.5.**

- LED indicator lamp of the output specified as the pulse output destination
- LED indicator lamp of the output specified as the rotation direction output device

3) Check that the same pulse output method is adopted for both the PLC and the servo amplifier (drive unit).

→ **For details on the pulse output method, refer to Subsection 4.6.1.**

→ **For details on high-speed output special adapter setting method,refer to Subsection 4.5.2.**

4) Check that the pulse output stop command flag is off.

→ **For details on the pulse output stop command flag, refer to Subsection 4.3.2.**

The following table shows the pulse output stop command flag of each pulse output destination device (Y000, Y001, Y002, Y003).

Pulse output destination device	Pulse output stop command flag	Operation
Y000	M8349	During pulse outputting operation, if the pulse output stop command flag of corresponding pulse output destination device is turned on, the pulse outputting operation will be immediately stopped.
Y001	M8359	
Y002	M8369	
Y003	M8379	

5) Check that the limit switch (forward or reverse rotation limit switch) is not activated.

→ **For details on the normal and reverse rotation limits, refer to Subsection 4.3.1.**

The following table shows the forward and reverse limit flags of each pulse output destination device (Y000, Y001, Y002, Y003).

Pulse output destination device	Forward limit flag	Reverse limit flag	Corresponding instruction and stop	
			PLSV instruction (M8338 = OFF)	DSZR, DVIT, ZRN, PLSV(M8338 = ON), DRVI, and DRVA instructions
Y000	M8343	M8344	If the corresponding rotation limit flag is turned on, pulse output (operation) will be immediately stopped.	If the corresponding rotation limit flag is turned on, the speed will be reduced, and then operation will be stopped.
Y001	M8353	M8354		
Y002	M8363	M8364		
Y003	M8373	M8374		

6) Check the operation timing of the positioning instruction.

If "pulse output monitor" (BUSY/READY) flag is on, and if the positioning instruction (excluding the ABS instruction) or the pulse output instruction (PLSR, PLSY) uses the same pulse output destination device, the instruction cannot be executed.

After the instruction activation contact is turned off, if "pulse output monitor" (BUSY/READY) flag is still on, do not execute the positioning instruction (including PLSR and PLSY instructions) having the same output number.

Before activating such an instruction, check that "pulse output monitor" (BUSY/READY) flag is off, and then wait until at least 1 scan time is completed.

Pulse output destination device	Pulse output monitor flag
Y000	M8340
Y001	M8350
Y002	M8360
Y003	M8370

13.4 If Operation Is Stopped at a Wrong Position

If operation is stopped at a wrong position, check the following items.

1) Check whether the electronic gear of the servo amplifier (drive unit) is set properly.
   → **For the electronic gear setting method of the MELSERVO Series, refer to Subsection 4.6.2.**

2) Check whether the origin is set properly.
   - Properly set the DOG so that the near-point signal (DOG) can be kept at the ON status until the speed is reduced to the creep speed. This instruction will start speed reduction at the front end of the DOG, and will stop the operation at the rear end of the DOG or at detection of the first zero-phase signal after passing the rear end of the DOG. After that, the current value register will be cleared (reset to "0"). If the speed is not reduced to the creep speed before detecting the rear end of the DOG, the operation may not be stopped at the specified position.
   - The creep speed should be low enough. The zero return instruction will not reduce the speed before stop. For this reason, if the creep speed is not low enough, the operation may not be stopped at the specified position due to inertia.
   - Devices for near-point signal (DOG)
     - DSZR instruction
       If an input (X000 to X017)*1 of main unit is specified for the near-point signal (DOG), the rear end of the near-point signal (DOG) will be monitored (detected) at 1-ms intervals (interruption). Under the following condition, however, monitoring (detection) of the near-point signal (DOG) rear end may be affected by the time constant at input or the scan time of the sequence program, and the operation may not be stopped at the specified position.
       a) An input number of X020 or below or the other device (auxiliary relay, etc.) is specified.
       *1.To use FX3U-16M□, specify an input in the range of X000 to X007.
     - ZRN instruction
       If an input (X000 to X007) of the main unit is specified for the near-point input signal, the interruption function will be adopted to stop the operation. Under the following condition, however, operation may be affected by the scan time of the sequence program, and the operation may not be stopped at the specified position.
       a) An input number of X010 or below or the other device (auxiliary relay, etc.) is specified. If input relay X010 or below is specified for the near-point signal, the input filter (10 ms) will be adopted.
   - If DSZR instruction is used:
     Since the zero-phase signal of the servo motor is used, adjust the relation between the rear end of the DOG and the zero-phase signal as shown in the following figure. If fine adjustment of the origin position is needed, adjust the position of the near-point signal (DOG).

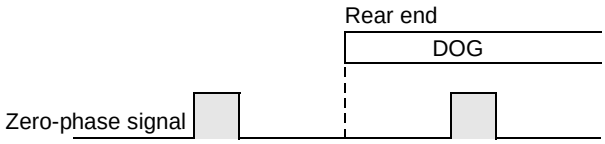

3) If reciprocating operation (operation in the forward rotation direction and then reverse rotation direction) is not stopped at the specified position: The built-in positioning function cannot correct the mechanical backlash (clearance, play) during positioning operation. If it is necessary to correct the backlash, preliminarily set the number of output pulses considering the backlash that may be caused when changing the transfer direction.

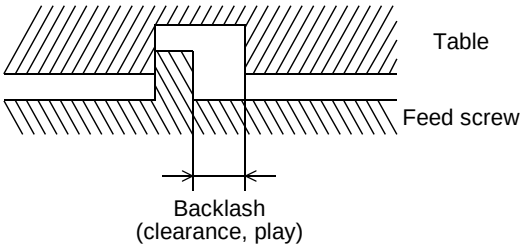

FX3U/FX3UC Series Programmable Controllers

User's Manual [Positioning Control Edition]
Appendix: Example Connection

Foreword

To use the positioning function of the MELSEC-F FX3U/FX3UC Series PLC described in this manual, the PLC should be connected to a servo amplifier drive unit. The Appendix, therefore, describes how to connect the PLC to a servo amplifier drive unit and should be read and understood before attempting to install or use the unit.
Store this manual in a safe place so that you can take it out and read it whenever necessary. Always forward it to the end user.

This manual confers no industrial property rights or any rights of any other kind, nor does it confer any patent licenses. Mitsubishi Electric Corporation cannot be held responsible for any problems involving industrial property rights which may occur as a result of using the contents noted in this manual.

© 2005 MITSUBISHI ELECTRIC CORPORATION

Description of Manual (Example of Connection)

In this manual, the following formats are used for description of the examples of connection:

Shows the title of the manual and the title of the division.
This area shows the title of the manual and the title of the division for the page currently opend.
1st line: Shows the title of the manual.
2nd line: Shows the title of the division.

Shows the title of the chapter and the title of the section.
This area shows the title of the chapter and the title of the section for the page currently opened.

Indexes the division titles.
The right side of each page indexes the title of the division for the page currently opened.

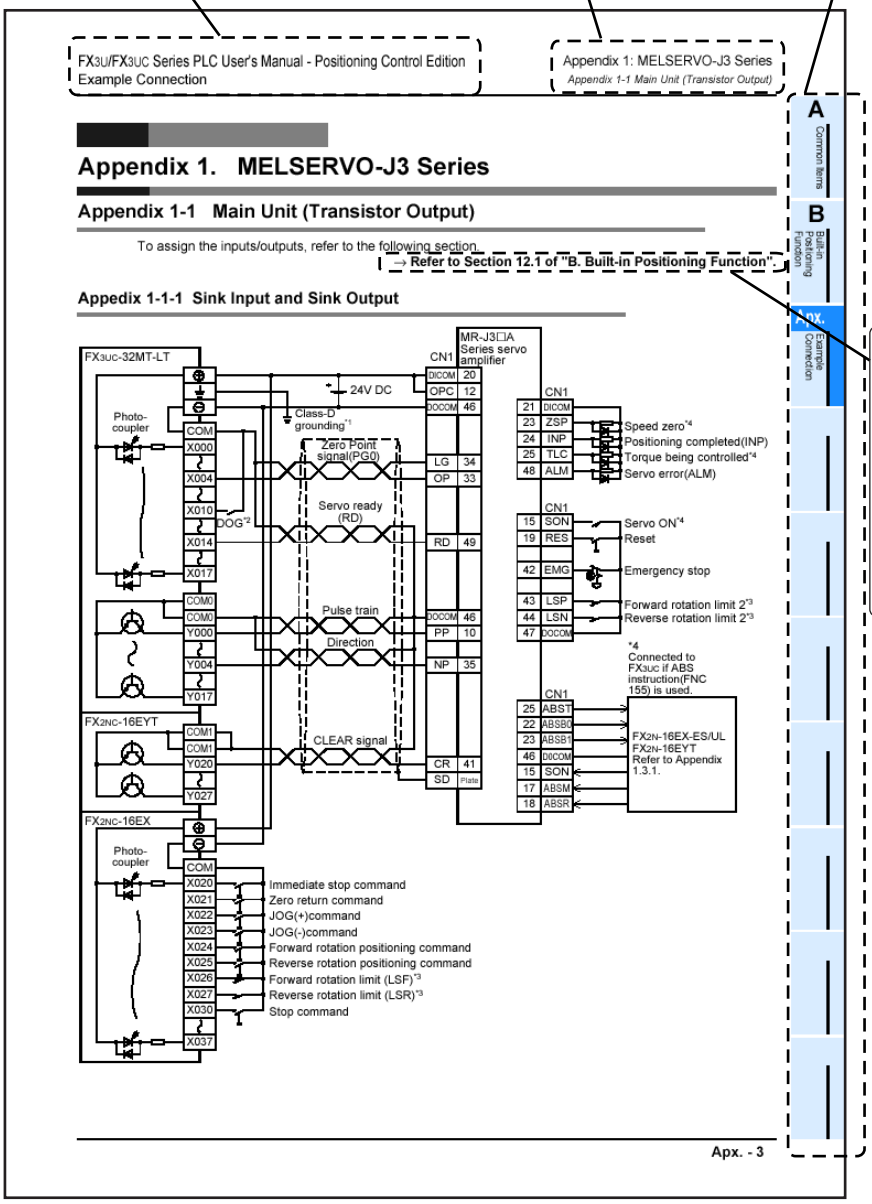

Shows the reference.
This area shows the reference document (the reference document is shown next to "→").
If the reference is in "Appendix: Examples of Connection", the chapter, section, or item number only will be shown next to "→" .

Appendix 1. MELSERVO-J3 Series

Appendix 1-1 Main Unit (Transistor Output)

To assign the inputs/outputs, refer to the following section.

→ **Refer to Section 12.1 of "B. Built-in Positioning Function".**

Appedix 1-1-1 Sink Input and Sink Output

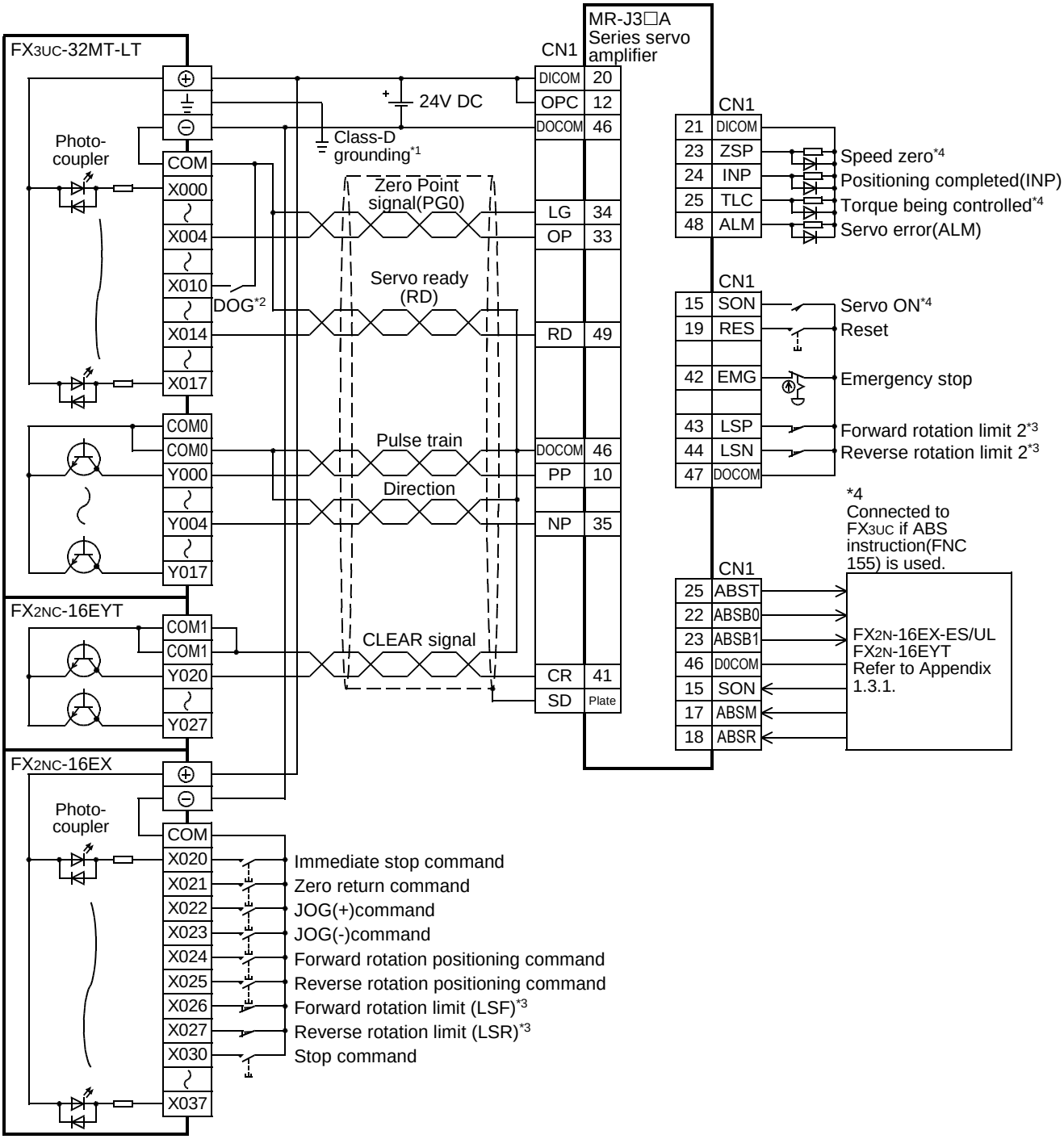

*1. Be sure to use the class-D grounding method (grounding resistance: 100 Ω or less).

*2. Near-point signal (DOG)

*3. To ensure safety, adopt the forward rotation limit switch and the reverse rotation limit switch on both sides: the PLC side and the servo amplifier side.
Note that the limit switches on the PLC side should be activated slightly earlier than the limit switches on the servo amplifier side.

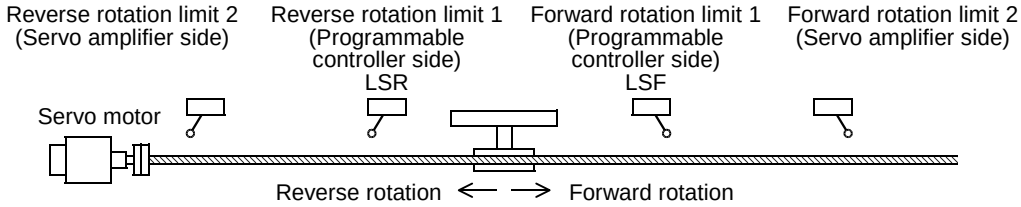

*4. To detect absolute positions, connect this line to the PLC.

Appendix 1-2 High-Speed Output Special Adapter

To assign the inputs/outputs, refer to the following section.

→ **B. Refer to Section 12.1 of "Built-in Positioning Function".**

Appedix 1-2-1 Sink Input, Sink Output (Transistor), and Differential Line Driver Output

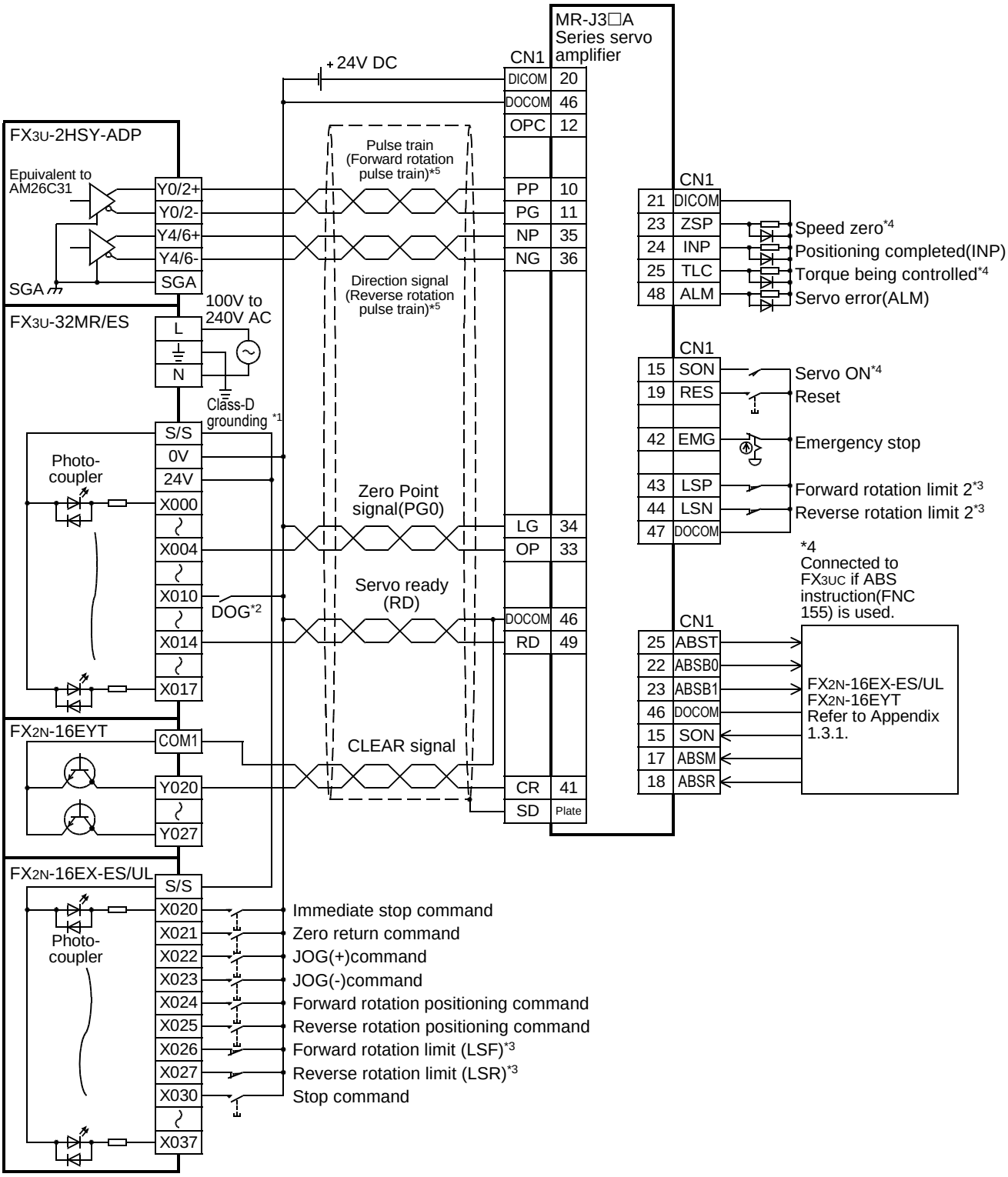

*1. Be sure to use the class-D grounding method (grounding resistance: 100 Ω or less).

*2. Near-point signal (DOG)

*3. To ensure safety, adopt the forward rotation limit switch and the reverse rotation limit switch on both sides: the PLC side and the servo amplifier side. Note that the limit switches on the PLC side should be activated slightly earlier than the limit switches on the servo amplifier side.

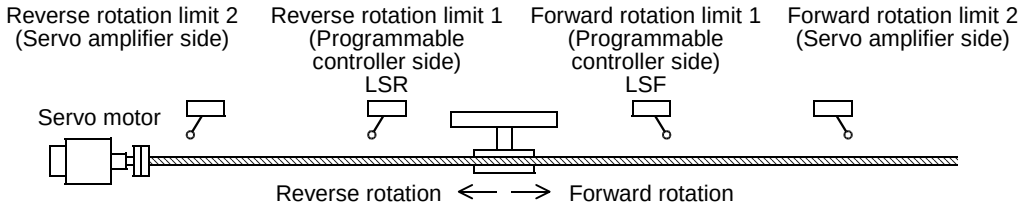

*4. To detect absolute positions, connect this line to the PLC.

*5. Set the pulse output form by pulse output form setting switch.

Pulse output method setting switch	Pulse output method
FP•RP side	Forward/reverse pulse train
PLS•DIRside	Pulse train + direction

Appendix 1-3 Absolute Position Detection (Transistor Output)

To assign the inputs/outputs, refer to the following section.

→ **Refer to Section 12.1 of "B. Built-in Positioning Function"**

Appendix 1-3-1 Sink Input and Sink Output

1. FX3U PLC

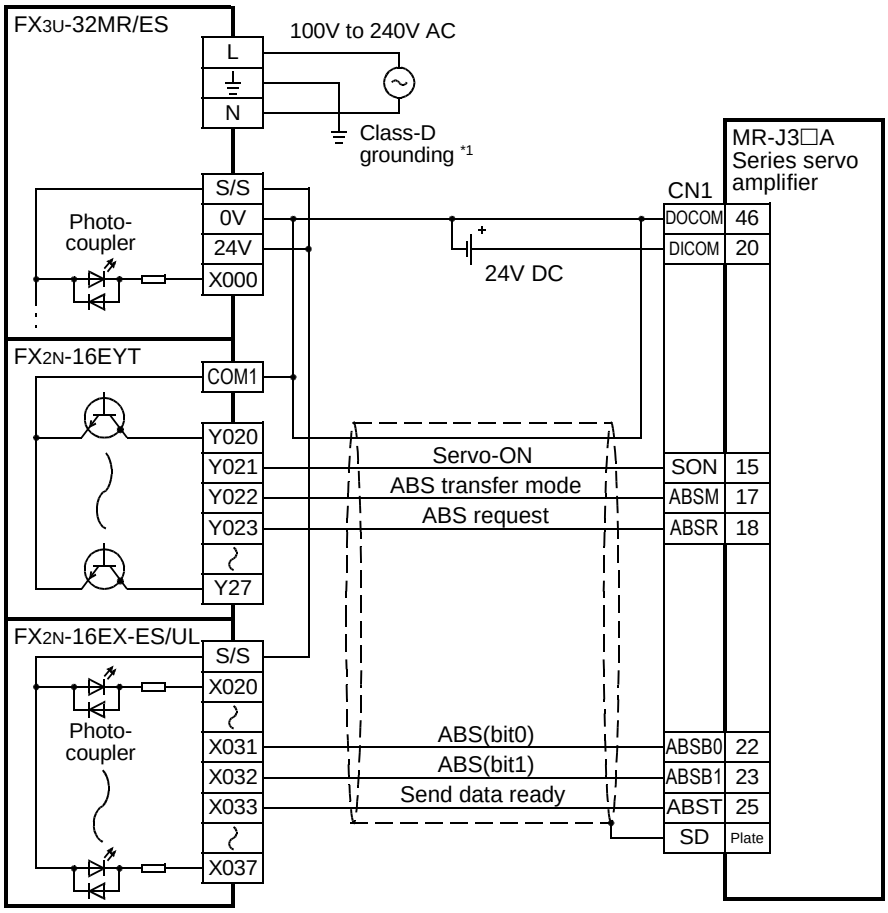

*1. Be sure to use the class-D grounding method (grounding resistance: 100 Ω or less).

2. FX3UC PLC

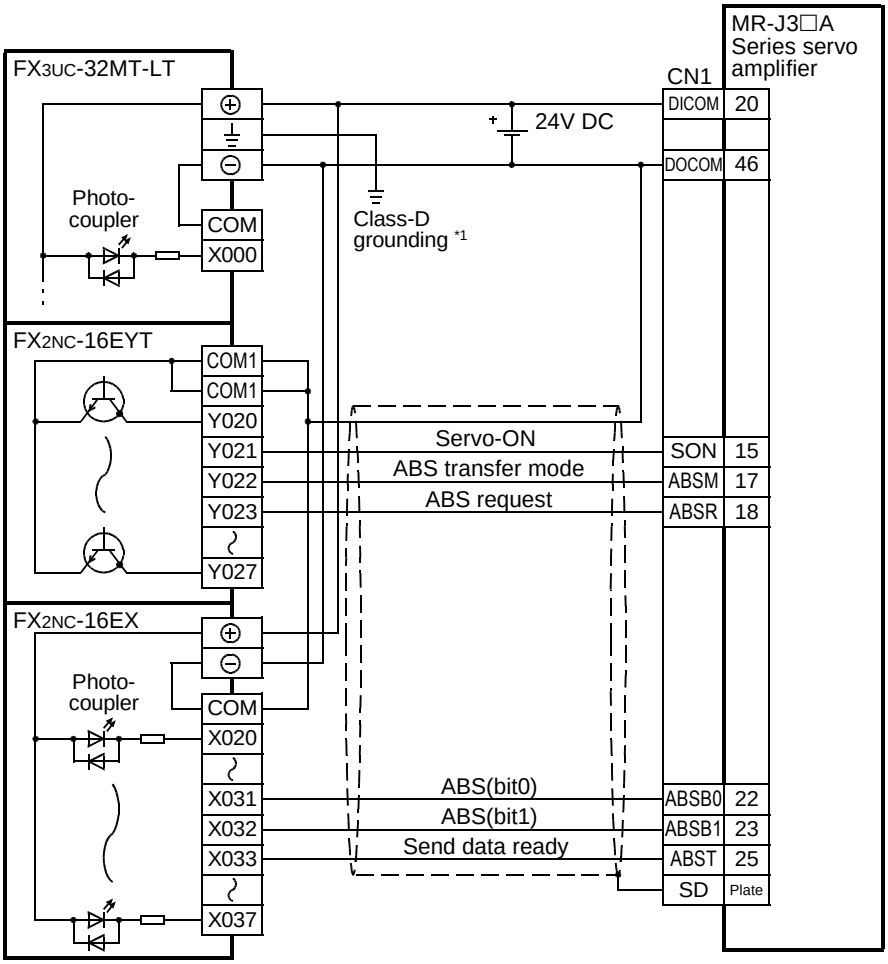

*1. Be sure to use the class-D grounding method (grounding resistance: 100 Ω or less).

Appendix 2. MELSERVO-J2 (-Super) Series

Appendix 2-1 Main Unit (Transistor Output)

To assign the inputs/outputs, refer to the following section.

→ **Refer to Section 12.1 of "B. Built-in Positioning Function".**

Appendix 2-1-1 Sink Input and Sink Output

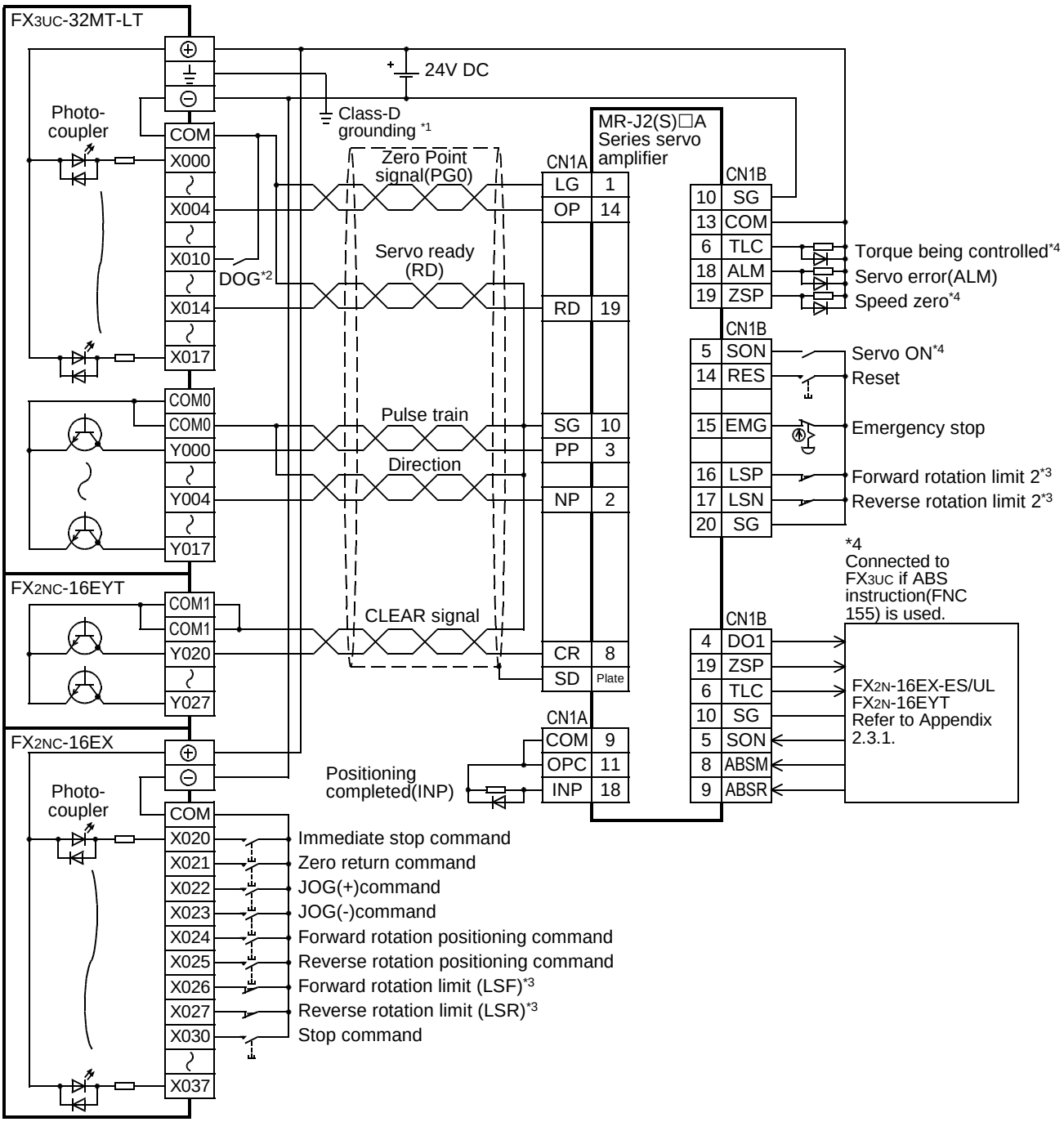

*1. Be sure to use the class-D grounding method (grounding resistance: 100 Ω or less).

*2. Near-point signal (DOG)

*3. To ensure safety, adopt the forward rotation limit switch and the reverse rotation limit switch on both sides: the PLC side and the servo amplifier side. Note that the limit switches on the PLC side should be activated slightly earlier than the limit switches on the servo amplifier side.

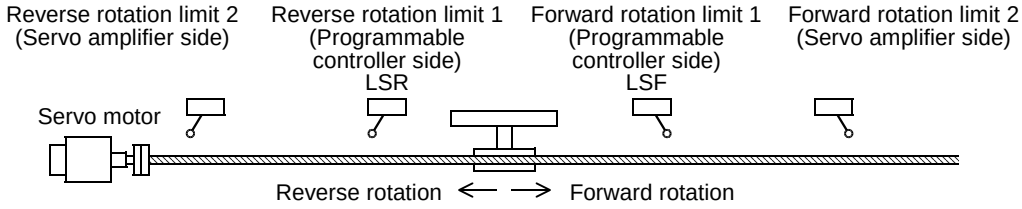

*4. To detect absolute positions, connect this line to the PLC.

Appendix 2-2 High-Speed Output Special Adapter

To assign the inputs/outputs, refer to the following section.

→ **Refer to Section 12.1 of "B. Built-in Positioning Function".**

Appendix 2-2-1 Sink Input, Sink Output (Transistor), and Differential Line Driver Output

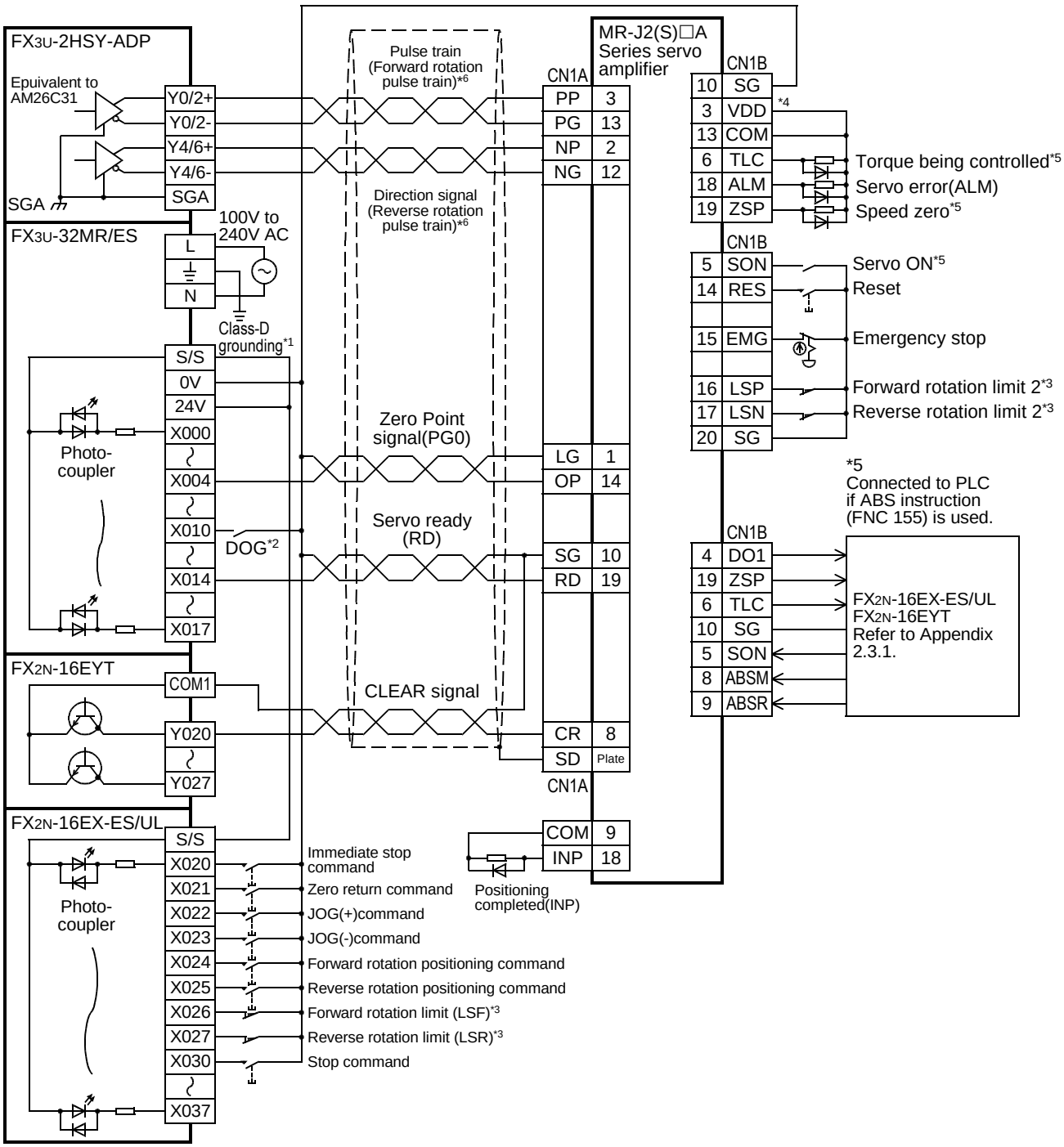

*1. Be sure to use the class-D grounding method (grounding resistance: 100 Ω or less).

*2. Near-point signal (DOG)

*3. To ensure safety, adopt the forward rotation limit switch and the reverse rotation limit switch on both sides: the PLC side and the servo amplifier side. Note that the limit switches on the PLC side should be activated slightly earlier than the limit switches on the servo amplifier side.

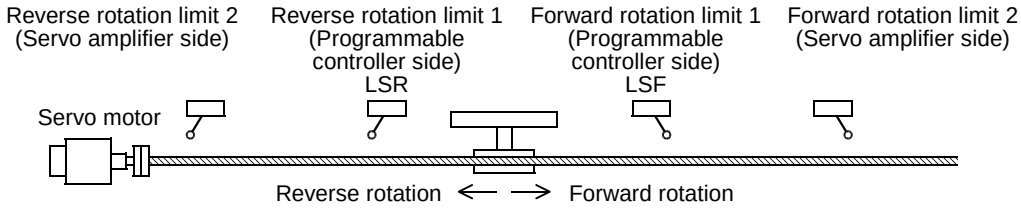

*4. For details of the MR-J2(S) servo amplifier, such as the tolerance for the internal power and operation of the servo amplifier, refer to the following manual.

→ **For details, refer to the servo amplifier manual.**

*5. To detect absolute positions, connect this line to the PLC.

*6. Set the pulse output method using the pulse output method setting switch.

Pulse output method setting switch	Pulse output method
FP•RP side	Forward/reverse pulse train
PLS•DIR side	Pulse train + direction

Appendix 2-3 Absolute Position Detection (Transistor Output)

To assign the inputs/outputs, refer to the following section.

→ **Refer to Section 12.1 of "B. Built-in Positioning"**

Appendix 2-3-1 Sink Input and Sink Output

1. FX3U PLC

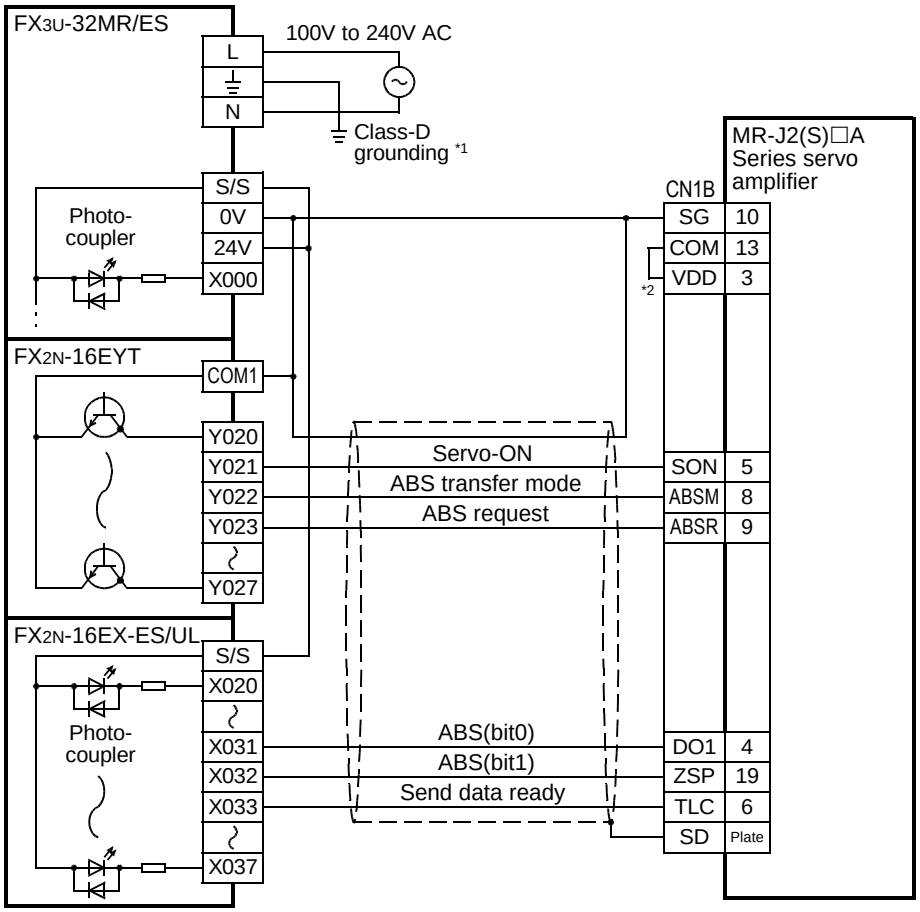

*1. Be sure to use the class-D grounding method (grounding resistance: 100 Ω or less).

*2. For details of the MR-J2(S) servo amplifier, such as the tolerance for the internal power and operation of the servo amplifier, refer to the following manual.

→ **For details, refer to the servo amplifier manual.**

2. FX3UC PLC

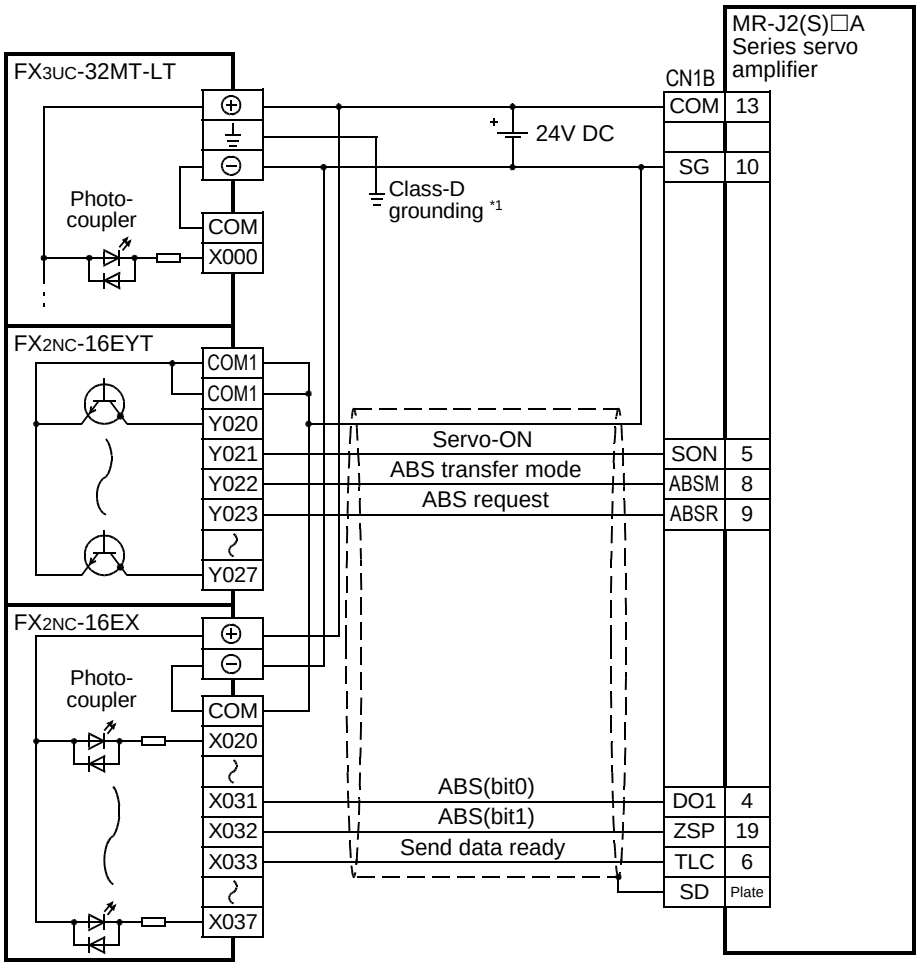

*1. Be sure to use the class-D grounding method (grounding resistance: 100 Ω or less).

Appendix 3. MELSERVO-H Series

Appendix 3-1 Main Unit (Transistor Output)

To assign the inputs/outputs, refer to the following section.

→ **Refer to Section 12.1 of "B. Built-in Positioning Function".**

Appendix 3-1-1 Sink Input and Sink Output

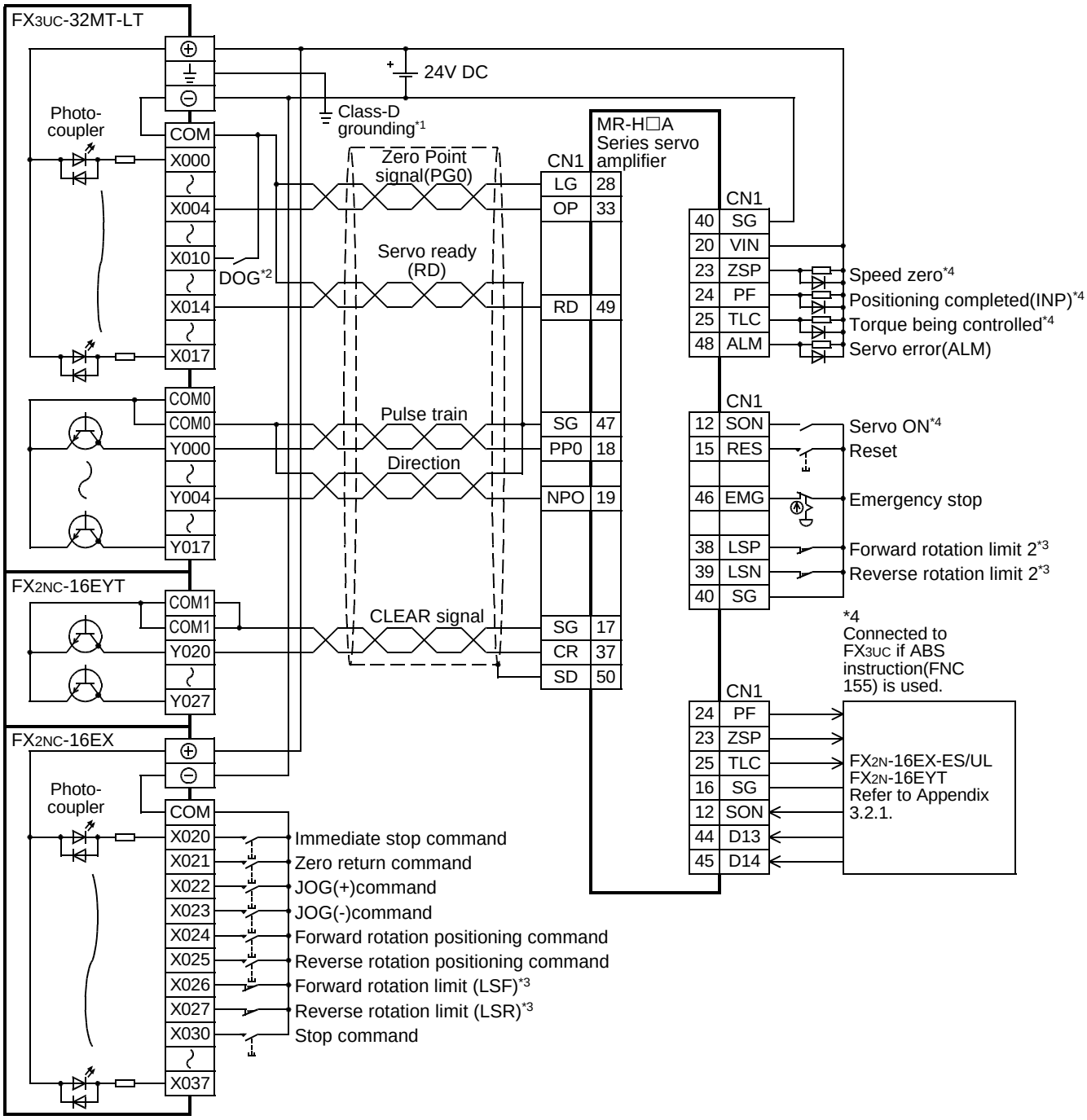

*1. Be sure to use the class-D grounding method (grounding resistance: 100 Ω or less).

*2. Near-point signal (DOG)

*3. To ensure safety, adopt the forward rotation limit switch and the reverse rotation limit switch on both sides: the PLC side and the servo amplifier side. Note that the limit switches on the PLC side should be activated slightly earlier than the limit switches on the servo amplifier side.

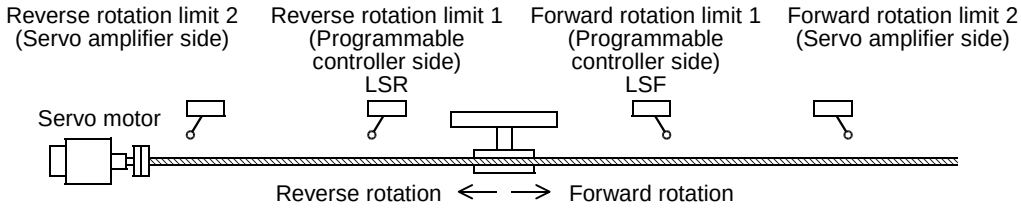

*4. To detect absolute positions, connect this line to the PLC.

Appendix 3-2 Absolute Position Detection (Transistor Output)

To assign the inputs/outputs, refer to the following section.

→ **Refer to Section 12.1 of "B. Incorporated Positioning"**

Appendix 3-2-1 Sink Input and Sink Output

1. FX3UC PLC

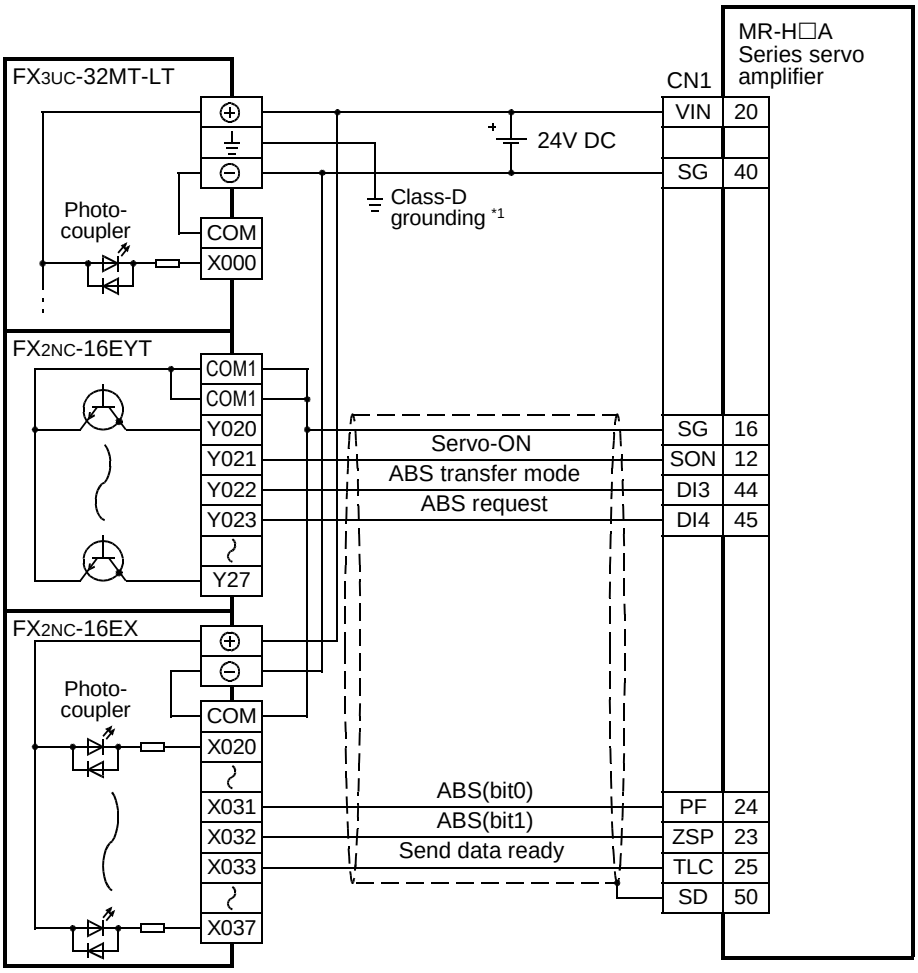

*1. Be sure to use the class-D grounding method (grounding resistance: 100 Ω or less).

Appendix 4. MELSERVO-C Series

Appendix 4-1 Main Unit (Transistor Output)

To assign the inputs/outputs, refer to the following section.

→ **Refer to Section 12.1 of "B. Built-in Positioning Function".**

Appendix 4-1-1 Sink Input and Sink Output

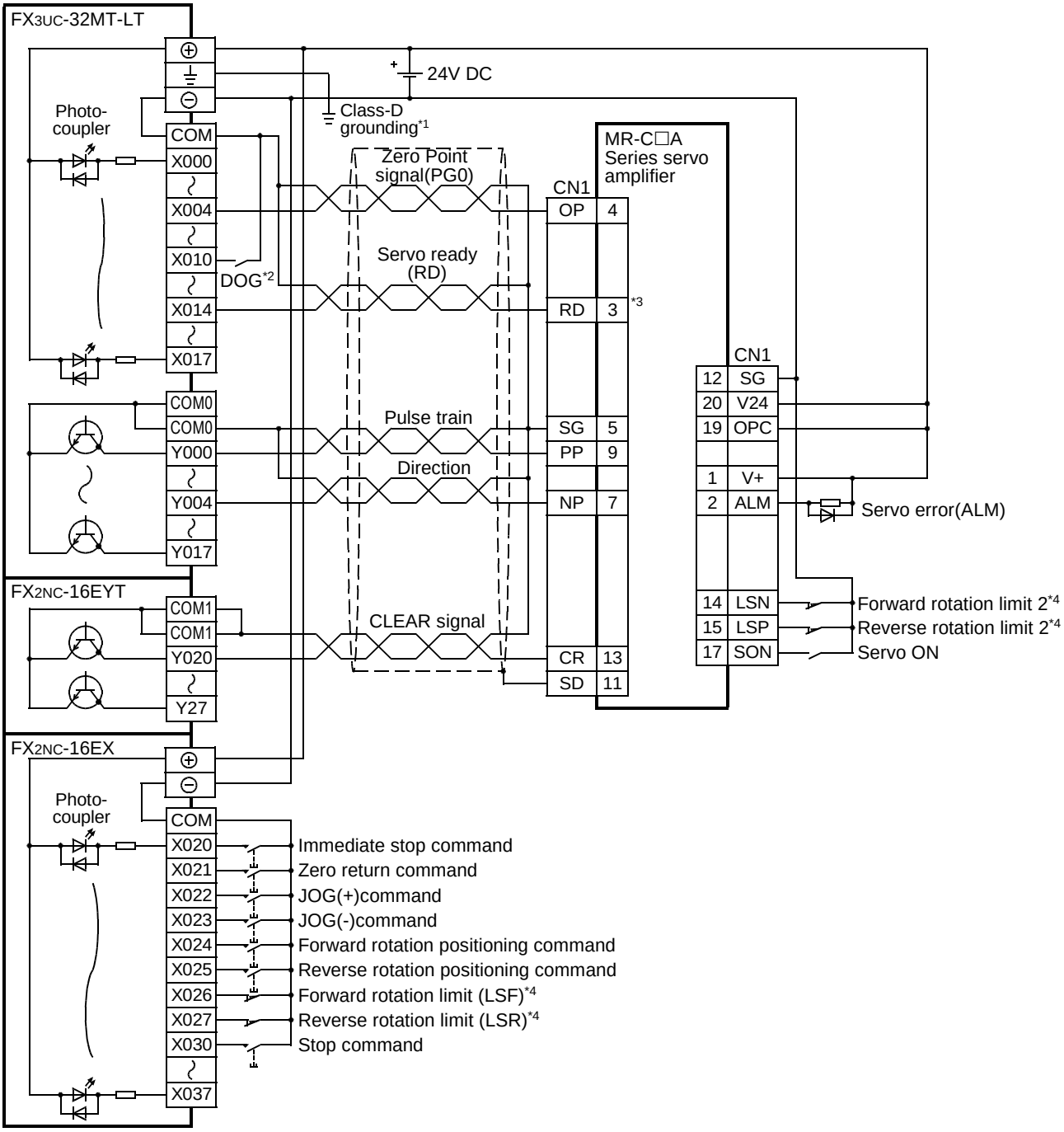

*1. Be sure to use the class-D grounding method (grounding resistance: 100 Ω or less).
*2. Near-point signal (DOG)
*3. Set the parameter No.21 at servo amplifier to "020".

*4. To ensure safety, adopt the forward rotation limit switch and the reverse rotation limit switch on both sides: the PLC side and the servo amplifier side. Note that the limit switches on the PLC side should be activated slightly earlier than the limit switches on the servo amplifier side.

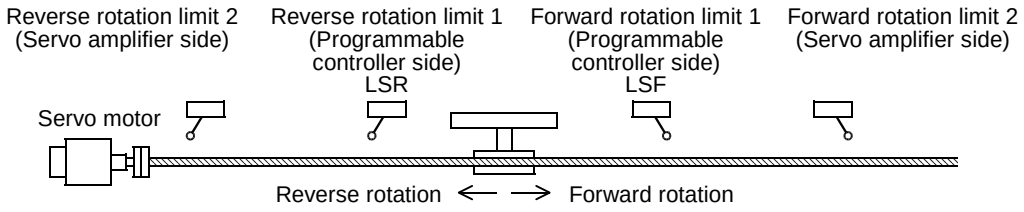

Appendix 4-2 High-Speed Output Special Adapter

To assign the inputs/outputs, refer to the following section.

→ **Refer to Section 12.1 of "B. Built-in Positioning Function"**

Appendix 4-2-1 Sink Input, Sink Output, and Differential Line Driver Output

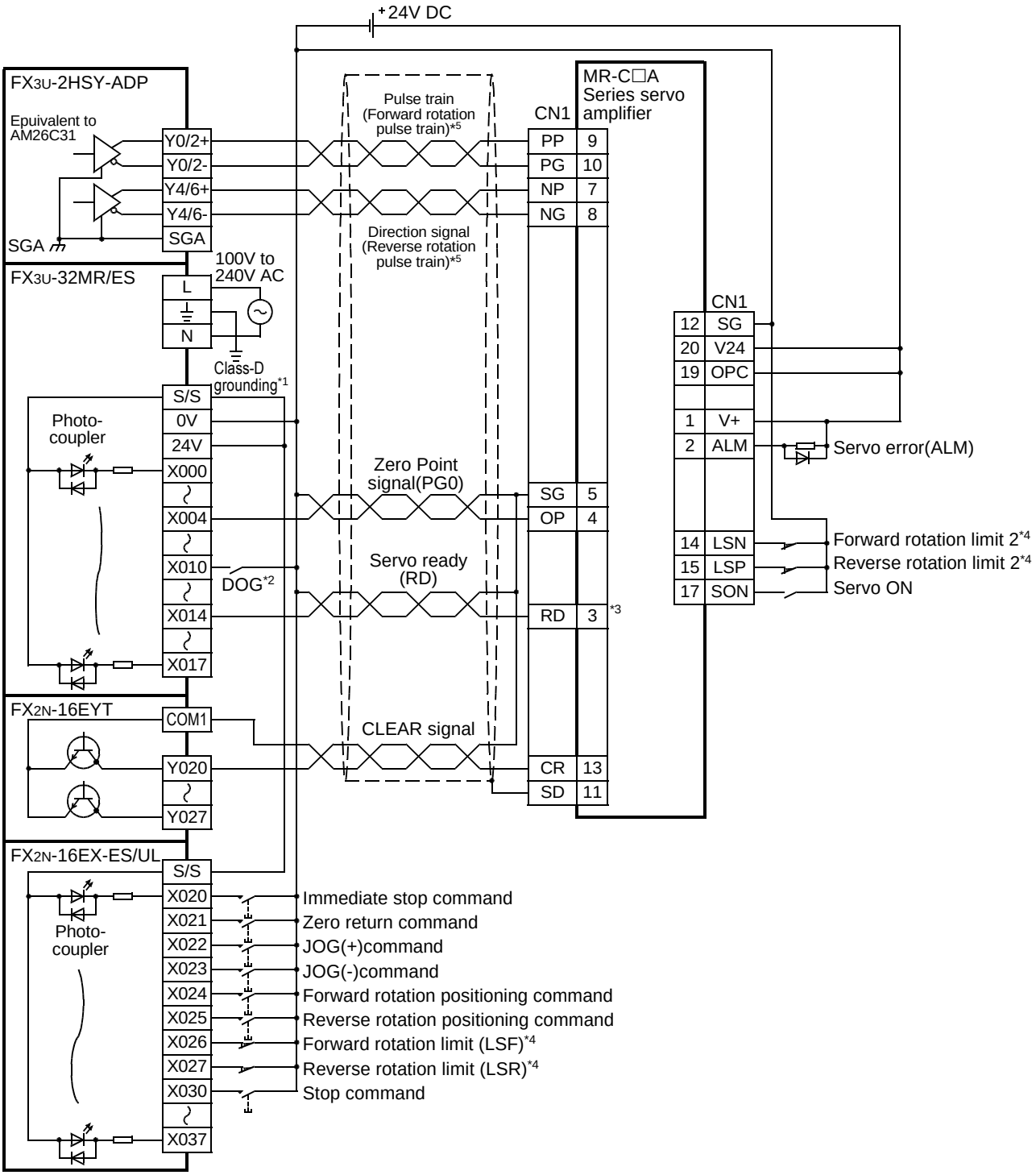

*1. Be sure to use the class-D grounding method (grounding resistance: 100 Ωor less).

*2. Near-point signal (DOG)

*3. Set the parameter No.21 at servo amplifier to "020".

*4. To ensure safety, adopt the forward rotation limit switch and the reverse rotation limit switch on both sides: the PLC side and the servo amplifier side. Note that the limit switches on the PLC side should be activated slightly earlier than the limit switches on the servo amplifier side.

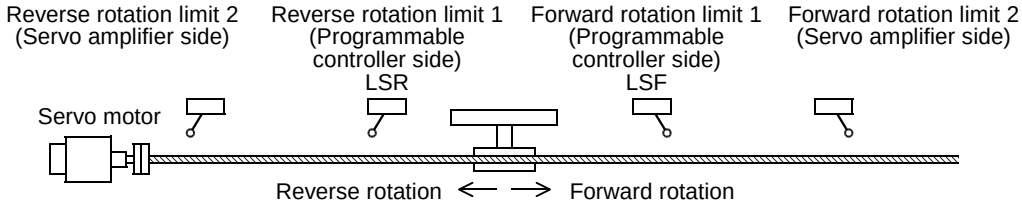

*5. Set the pulse output method using the pulse output method setting switch.

Pulse output method setting switch	Pulse output method
FP•RP side	Forward/reverse pulse train
PLS•DIR side	Pulse train + direction

Warranty

Please confirm the following product warranty details before using this product.

1. Gratis Warranty Term and Gratis Warranty Range

If any faults or defects (hereinafter "Failure") found to be the responsibility of Mitsubishi occurs during use of the product within the gratis warranty term, the product shall be repaired at no cost via the sales representative or Mitsubishi Service Company. However, if repairs are required onsite at domestic or overseas location, expenses to send an engineer will be solely at the customer's discretion. Mitsubishi shall not be held responsible for any re-commissioning, maintenance, or testing on-site that involves replacement of the failed module.

[Gratis Warranty Term]

The gratis warranty term of the product shall be for one year after the date of purchase or delivery to a designated place. Note that after manufacture and shipment from Mitsubishi, the maximum distribution period shall be six (6) months, and the longest gratis warranty term after manufacturing shall be eighteen (18) months. The gratis warranty term of repair parts shall not exceed the gratis warranty term before repairs.

[Gratis Warranty Range]

1) The range shall be limited to normal use within the usage state, usage methods and usage environment, etc., which follow the conditions and precautions, etc., given in the instruction manual, user's manual and caution labels on the product.
2) Even within the gratis warranty term, repairs shall be charged for in the following cases.
   a) Failure occurring from inappropriate storage or handling, carelessness or negligence by the user. Failure caused by the user's hardware or software design.
   b) Failure caused by unapproved modifications, etc., to the product by the user.
   c) When the Mitsubishi product is assembled into a user's device, Failure that could have been avoided if functions or structures, judged as necessary in the legal safety measures the user's device is subject to or as necessary by industry standards, had been provided.
   d) Failure that could have been avoided if consumable parts (battery, backlight, fuse, etc.) designated in the instruction manual had been correctly serviced or replaced.
   e) Relay failure or output contact failure caused by usage beyond the specified Life of contact (cycles).
   f) Failure caused by external irresistible forces such as fires or abnormal voltages, and failure caused by force majeure such as earthquakes, lightning, wind and water damage.
   g) Failure caused by reasons unpredictable by scientific technology standards at time of shipment from Mitsubishi.
   h) Any other failure found not to be the responsibility of Mitsubishi or that admitted not to be so by the user.

2. Onerous repair term after discontinuation of production

1) Mitsubishi shall accept onerous product repairs for seven (7) years after production of the product is discontinued.
   Discontinuation of production shall be notified with Mitsubishi Technical Bulletins, etc.
2) Product supply (including repair parts) is not available after production is discontinued.

3. Overseas service

Overseas, repairs shall be accepted by Mitsubishi's local overseas FA Center. Note that the repair conditions at each FA Center may differ.

4. Exclusion of loss in opportunity and secondary loss from warranty liability

Regardless of the gratis warranty term, Mitsubishi shall not be liable for compensation of damages caused by any cause found not to be the responsibility of Mitsubishi, loss in opportunity, lost profits incurred to the user or third person by Failures of Mitsubishi products, special damages and secondary damages whether foreseeable or not , compensation for accidents, and compensation for damages to products other than Mitsubishi products, replacement by the user, maintenance of on-site equipment, start-up test run and other tasks.

5. Changes in product specifications

The specifications given in the catalogs, manuals or technical documents are subject to change without prior notice.

6. Product application

1) In using the Mitsubishi MELSEC programmable logic controller, the usage conditions shall be that the application will not lead to a major accident even if any problem or fault should occur in the programmable logic controller device, and that backup and fail-safe functions are systematically provided outside of the device for any problem or fault.
2) The Mitsubishi programmable logic controller has been designed and manufactured for applications in general industries, etc. Thus, applications in which the public could be affected such as in nuclear power plants and other power plants operated by respective power companies, and applications in which a special quality assurance system is required, such as for Railway companies or Public service purposes shall be excluded from the programmable logic controller applications.
   In addition, applications in which human life or property that could be greatly affected, such as in aircraft, medical applications, incineration and fuel devices, manned transportation, equipment for recreation and amusement, and safety devices, shall also be excluded from the programmable logic controller range of applications.
   However, in certain cases, some applications may be possible, providing the user consults their local Mitsubishi representative outlining the special requirements of the project, and providing that all parties concerned agree to the special circumstances, solely at the users discretion.

Revised History

Date	Revision	Discription
7/2005	A	First Edition

USER'S MANUAL - Positioning Control Edition

FX3U/FX3UC SERIES PROGRAMMABLE CONTROLLERS

MITSUBISHI ELECTRIC CORPORATION
HEAD OFFICE: MITSUBISHI DENKI BLDG MARUNOUCHI TOKYO 100-8310
HIMEJI WORKS: 840, CHIYODA CHO, HIMEJI, JAPAN

MODEL	FX3U-U-POS-E
MODEL CODE	09R620

JY997D16801A
(MEE)

Effective July 2005
Specifications are subject to change without notice.